JSC Contracting Building 'B'

PRESCOTT, ARIZONA

Deferred Submittals

The following items are required and will be provided as a deferred submittal:

1. Automatic Fire Sprinkler System.
2. Fire Alarm System.

Automatic Fire Sprinkler System & Fire Alarm System submittal documents for deferred submittal shall be submitted to the local fire district, who shall review them and forward them to the building official, with a notation indicating that the deferred submittal documents have been reviewed and that they have been found to be in general conformance with the design of the building. The deferred submittal items shall "NOT" be installed until their design and submittal documents have been approved by the fire marshal having jurisdiction.

Vicinity Map

North NO SCALE

Project Information

Owner:	CJSI L.L.C. 6601 Inter Cal Way Prescott, AZ 86301	Contact: Jim Simpson (928) 713-5999 jim@jsccontracting.com
Prepared by:	W. Alan Kenson & Associates, P.C. P.O. Box 11593 Prescott, AZ 86304	Contact: Alan Kenson 928-443-5812 waka@cableone.net
Contractor:	JSC Contracting LLC 6601 Inter Cal Way Prescott, AZ 86301	Contact: Jim Simpson (928) 713-5999 jim@jsccontracting.com
Jobsite Address:	6601 Inter Cal Way Prescott, AZ 86301	
Parcel Number:	103-50-054D	
Lot Area:	3.33 Acres	
Zoning:	IL	
Current Code:	2018 International Building Code	
Proposed Building :	12,000 S.F.	
Occupancy:	F1 / S1 Factory Industrial Moderate Hazard / Storage	
Construction Type:	Type II-B	

Sheet Index

ARCHITECTURAL

CS1	Cover Sheet / Project Information
CS2	Occupancy / Egress and Code Summary
C1	Civil Cover Sheet
C2	General Notes
C3	Standard Details
C4	Existing Site Survey Map
C5	Project Summary Map
C6	Site Cross Sections
C7	Grading, Drainage and Utility Plan
C8	GSN and Retaining Wall Details
A0.0	Architectural Site Plan
A0.1	Site Details
A1.0	Reference / Wall Types Floor Plan
A1.1	Dimension Floor Plan
A2.0	Reflected Ceiling Plan / Ceiling Framing Plan
A3.0	Roof Plan
A4.0	Building Sections
A5.0	Exterior Elevations
A6.0	Enlarged Plans and Interior Elevations
A7.0	Door and Window Schedule &Types
A8.0	Room Finish Plan, Materials Schedule
A9.0	Details

STRUCTURAL

S1	General Structural Notes
S1.1	Typical Details T-Series
S1.2	More Typical Details T-Series
S2	Foundation Plan
S3	Roof Framing Plan
S3.1	Structural Framing Elevations
S4	Foundation Details 100 Series
S5	Framing Details 200 Series

MECHANICAL

M1.0	Mechanical Floor Plan
M2.0	Mechanical Schedules and Details

PLUMBING

P1.1	Plumbing Floor Plan
P2.1	Plumbing Schedules
P3.1	Plumbing Schematics
P3.2	Plumbing Schematics

ELECTRICAL

E1.0	Electrical Symbols, Specifications, One-Line Diagram & Notes
E1.1	Electrical Site Plan
E1.2	Lighting and Power Floor Plan

COMMERCIAL FIRE SPRINKLER AND FIRE ALARM PLANS ARE REQUIRED
They can be a deferred submittal. Sprinkler and Alarm plans must be submitted at the same time and approved prior to the Building Footer inspection.

Project Description

JSC CONTRACTING INTENDS TO BUILD A 12,000 S.F. METAL BUILDING ON THEIR EXISTING PROPERTY. EIGHT SUITES WILL BE PROVIDED TO BE LEASED OUT FOR LIGHT INDUSTRIAL USE. TWO EXTERIOR ENTRANCE SINGLE USER RESTROOMS WILL BE PROVIDED AS WELL AS A JANITOR CLOSET. A 12,000 S.F. BUILDING EXISTS ON THE PROPERTY THAT WAS COMPLETED IN 2023.

PARKING CALCULATIONS

LIGHT MANUFACTURING 12,000 SF / 500 = 24 PARKING SPACES

TOTAL PARKING SPACES REQUIRED =24
TOTAL PARKING SPACES PROVIDED = 26

Graphic Standards

EXISTING DOOR
PROPOSED DOOR
North — NORTH ARROW INDICATOR
NUMBER / SHEET — DETAIL DESIGNATOR
LETTER / SHEET — BUILDING SECTION DESIGNATOR
GRID LINE DESIGNATOR
NUMBER — REVISION DESIGNATOR
#/SHEET — ELEVATION DESIGNATOR
DESCRIPTIVE NOTE DESIGNATOR
ROOM NUMBER / FINISH DESIGNATOR
— DOOR NUMBER DESIGNATOR
LETTER — DOOR TYPE DESIGNATOR
LETTER — WINDOW TYPE DESIGNATOR
WALL TYPE DESIGNATOR

Code Analysis

OCCUPANCY	F1 / S1
USE	Factory Industrial / Storage
BUILDING AREA	12,000
ALLOWABLE BUILDING AREA	62,000 SPRINKLED
ALLOWABLE BUILDING HEIGHT	PER FEDERAL AVIATION REGULATIONS
PROPOSED HEIGHT	24'
ALLOWABLE STORIES	3
PROPOSED STORIES	1
CONSTRUCTION TYPE	II-B
FIRE PROTECTION SYSTEMS	ALARM AND SPRINKLERS
OCCUPANT LOAD	23
EGRESS EXITS REQUIRED	1
EGRESS EXITS PROVIDED	16
OCCUPANCY SEPARATION	0
PARKING REQUIRED	24
PARKING PROVIDED	26

SHELL BUILDING - NO METERS NO OCCUPANCY WITH THIS PERMIT.
CERTIFICATE OF COMPLETION ONLY,EACH TENANT OR OWNER MUST HAVE A PRE-APPLICATION MEETING AND PULL A SEPARATE PERMIT FOR OCCUPANCY.

ENGINEERING ATTACHED AS PART OF THESE PLANS

VABOR BARRIER REQUIRED
6 MIL VAPOR BARRIER REQUIRED UNDER HABITABLE SLABS.

METERS ALLOWED FOR HOUSE PANELS FOR SPRINKLERS, ALARMS AND COMMUNITY BATHROOMS.

CITY OF PRESCOTT PERMIT
Permit #: B2407-176
Accepted date: 1/21/2025
Address: 6601 INTER CAL WAY

This set of plans has been reviewed for Code Compliance, accepted, and released for construction. A 'City of Prescott' stamped, paper copy of all plans, corresponding permit, supplemental documents, trusses, and reports must be kept at the construction site, during working hours and made available for inspection(s). Field revisions and/or revisions to plans may require additional plan review. Plan acceptance and release for construction shall not prevent correction of errors in the plans where such errors are subsequently found to be in violation of any law or of any ordinance.

This acceptance and release for construction, does not relieve applicant from code compliance to obtain applicable Extension Agreements, Warranties, Certificate of Occupancy, Certificate of Completion, or Final on permitted project. Final Release is contingent upon favorable field inspections under current City of Prescott's adopted City Code, LDC, GES, IBC, IRC, IFC, IFGC, IPC, IMC, ADA, NEC, and other applicable codes or standards.

PLANS REVIEWED FOR CODE COMPLIANCE, ACCEPTED AND REVIEWED FOR CONSTRUCTION

Architect:

W. Alan Kenson & Associates, P.C.

P 928-443-5812 P.O. Box 11593
F 928-443-5815 Prescott, AZ 86304

email: waka@cableone.net
www.kenson-associates.com

ARCHITECTURE & PLANNING

REVISIONS	BY
1 City of Prescott Comments 10/8/2024	LO

These drawings are the property of W. Alan Kenson & Associates P.C., and may not be reproduced in any way without the written consent of W. Alan Kenson & Associates, P.C.

REGISTERED ARCHITECT CERTIFICATE NO. 25646 W. ALAN KENSON ARIZONA Date Signed 07/31/24 EXPIRES: 6/30/27

W. Alan Kenson & Associates, P.C.
P 928-443-5812 P.O. Box 11593
F 928-443-5815 Prescott, AZ 86304
email: waka@cableone.net
www.kenson-associates.com
ARCHITECTURE & PLANNING

DRAWING: Cover Sheet
PROJECT: JSC Contracting Building B, 6601 Inter Cal Way, Prescott, AZ 86301
APN: 103-50-054D
CNPLANS B2407-176 6601 INTER CAL WAY PLANS

DRAWN BY: L.O.
CHECKED BY: W.A.K.
DATE: July 31st, 2024
JOB NO.: 799
SHEET: CS1

Oct 21, 2024 - 1:23pm

Plumbing Calculations

OCCUPANCY CLASSIFICATION	OCCUPANCY COUNT	WATER CLOSETS	LAVATORIES	DRINKING FOUNTAINS	SERVICE SINK
BUSINESS/LIGHT INDUSTRIAL	23	.92	.57		
TOTAL REQUIRED		1	1	1	1
TOTAL PROVIDED		2	2	1	1

EXIT SIGNS:

- PROVIDE A 6"x9" BLUE TACTILE, BRAILLE, 'EXIT' SIGN AS MANUFACTURED BY 'SIMPLY EXIT SIGNS (#SE-1980)' OR EQUAL COMPLYING WITH ICC/ANSI A117.1 SECTION 703.1 AND IBC 1013 & SECTION 1111, ADJACENT TO EACH DOOR TO AN EXIT PASSAGEWAY AND THE EXIT DISCHARGE.

FIRE DEPARTMENT NOTES:

- FIRE EXTINGUISHERS SHALL BE PROVIDED IN ACCORDANCE WITH THE INTERNATIONAL FIRE CODE (IFC) AND NFPA 10.
- HAZARDOUS MATERIAL INVENTORY STATEMENTS (HMIS) MUST BE COMPLETED AND SUBMITTED ALONG WITH THE MATERIAL SAFETY DATA SHEETS (MSDS) PROVIDED BY THE MANUFACTURER OF THE PRODUCTS AND MATERIALS FOR ALL HAZARDOUS MATERIALS ONCE THE OCCUPANTS OF THE SUITES ARE IDENTIFIED. THE HMIS FORM MAY BE FOUND ON THE CITY WEB SITE AT WWW.PRESCOTT-AZ.GOV/DOCUMENTS.
- DOOR HARDWARE TO MEET 2018 IFC AND IBC REQUIREMENTS FOR EGRESS.
- PROVIDE ADDRESS NUMBERS IN A POSITION THAT IS PLAINLY LEGIBLE AND VISIBLE FROM THE STREET FRONTING THE PROPERTY. THESES NUMBERS SHALL BE A MINIMUM OF 6 INCHES WITH CONTRASTING BACKGROUND.

Accessibility Notes

1. ACCESS TO THESE FACILITIES SHALL BE AT PRIMARY ENTRANCES.
2. THE SLOPE OF PUBLIC WALKS SHALL NOT EXCEED A MAXIMUM CROSS SLOPE OF 2%.
3. WALKING SURFACES GREATER THAN 2% SHALL BE SLIP RESISTANT.
4. PROVIDE A 44"x60" MINIMUM LANDING ON THE STRIKE SIDE OF THE ENTRANCE DOOR WITH 44" MINIMUM WIDTH IN THE DIRECTION OF TRAVEL.
5. WALLS SHALL EXTEND 18" TO THE SIDE OF THE STRIKE EDGE OF A DOOR OR GATE THAT SWINGS TOWARDS THE OCCUPANT.
6. RAMPS SHALL HAVE A NON-SLIP SURFACE.
7. RAMPS SHALL BE A MINIMUM OF 36" WIDE.
8. EVERY REQUIRED EXIT DOORWAY SHALL BE SIZED FOR A DOOR NOT LESS THAN 36" WIDE BY NOT LESS THAN 6'-8" HIGH CAPABLE OF OPENING 90 DEGREES AND MOUNTED SO THE CLEAR WIDTH OF THE EXIT WAY IS 32" MINIMUM.
9. THRESHOLDS TO BE A MAXIMUM OF 1/4" ABOVE ADJACENT FLOOR FINISH. ONE-HALF INCH THRESHOLD MAY BE USED IF BEVELED PER A.D.A. STANDARDS.
10. MAXIMUM EFFORT TO OPERATE A DOOR SHALL NOT EXCEED 5 POUNDS.
11. THE BOTTOM 10 INCHES OF ALL DOORS EXCEPT AUTOMATIC AND SLIDING DOORS SHALL HAVE A SMOOTH UNINTERRUPTED SURFACE.
12. PROVIDE LEVER TYPE HARDWARE, PANIC BARS, PUSH AND PULL ACTIVATING BARS, OR OTHER HARDWARE DESIGNED TO PROVIDE PASSAGE WITHOUT REQUIRING THE ABILITY TO GRASP THE OPENING HARDWARE. (30" TO 44" A.F.F.)

Egress Legend:

- EXIT ACCESS
- (A) ACCESSORY USE (NO OCCUPANCY)
- [XX] ROOM OCCUPANCY LOAD
- (XX) SUBTOTAL OCCUPANCY LOAD
- [XX] OCCUPANCY TOTAL
- [XX] REQUIRED EXIT WIDTH (FACTOR = 0.15)
- [XX] PROVIDED EXIT WIDTH
- (#) WORST CASE TRAVEL DISTANCE

FUNCTION OF SPACE	OCCUPANT LOAD FACTOR
WAREHOUSE	500 GROSS

Occupant load

NOTE:
GROSS SQUARE FOOTAGE LISTED BELOW DOES NOT INCLUDE ACCESSORY AREAS.

WAREHOUSE AREA	11,491 SQ. FT.	23 OCCUPANTS

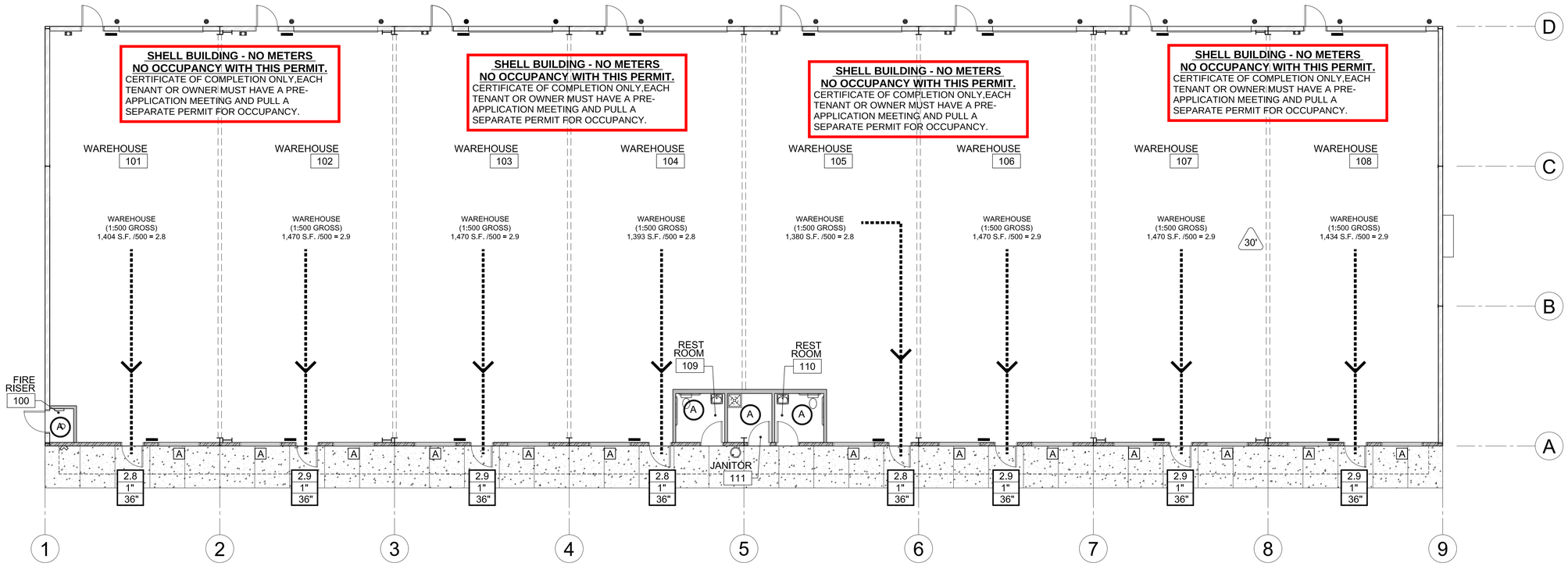

A1 Occupancy / Egress Plan

Scale: 1/8"=1'-0"

Plan North

Jul 31, 2024 - 8:58am

REVISIONS	BY

These drawings are the property of W. Alan Kenson & Associates P.C., and may not be reproduced in any way without the written consent of W. Alan Kenson & Associates, P.C.

REGISTERED ARCHITECT CERTIFICATE NO. 25646 W. ALAN KENSON Date Signed 07/31/24 ARIZONA U.S.A. EXPIRES: 6/30/27

W. Alan Kenson & Associates, P.C.
P.O. Box 11593
Prescott, AZ 86304
P 928-443-5812
F 928-443-5815
email: waka@cableone.net
www.kenson-associates.com
ARCHITECTURE & PLANNING

DRAWING: Occupancy / Egress Plan and Code Summary

PROJECT: JSC Contracting Building B
6601 Inter Cal Way
Prescott, AZ 86301

APN: 103-50-054D
CNPLANS_B2407-176 6601 INTER CAL WAY PLANS

DRAWN BY: L.O.
CHECKED BY: W.A.K.
DATE: July 31st, 2024
JOB NO. 799
SHEET

CS2

JSC CONTRACTING BUILDING 'B'

CIVIL IMPROVEMENT PLANS

APN: 103-50-054D, PRESCOTT AIRPARK UNIT 9 REPLAT 1 LOTS 67-68
SITUATED IN A PORTION OF SECTION 30, TOWNSHIP 15 NORTH, RANGE 1 WEST GILA AND SALT RIVER MERIDIAN
CITY OF PRESCOTT, YAVAPAI COUNTY, ARIZONA

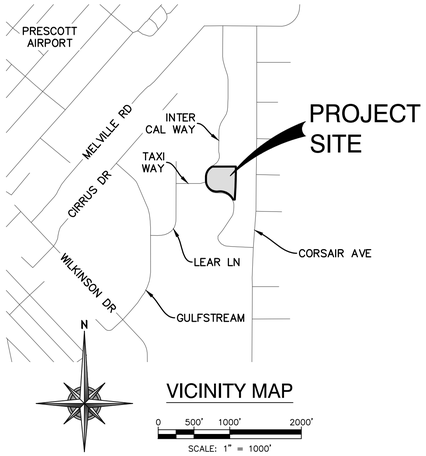

VICINITY MAP

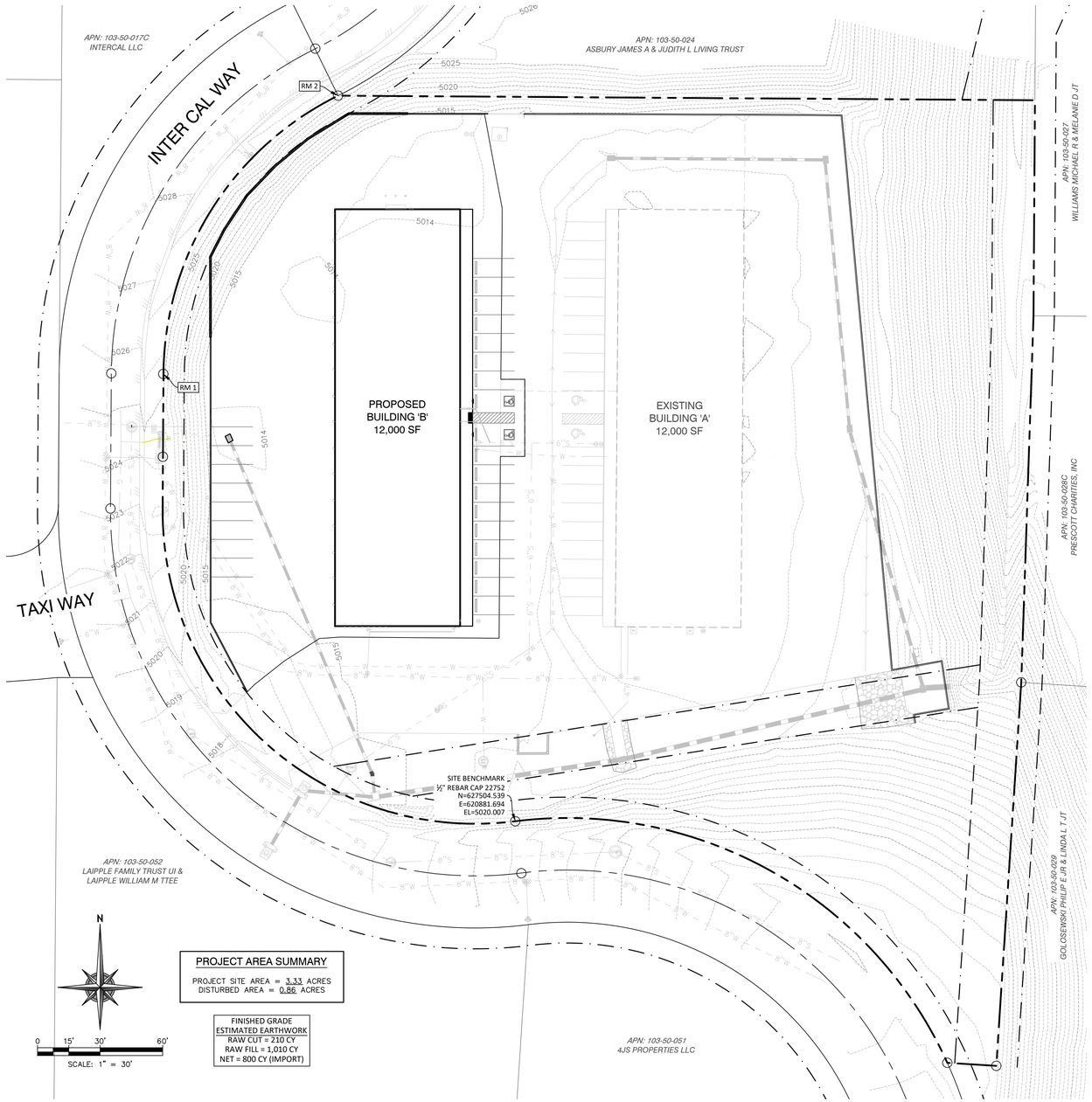

LOCATION MAP

UTILITY CONTACT INFORMATION

UTILITY	COMPANY	CONTACT	PHONE
ELECTRIC/POWER	ARIZONA PUBLIC SERVICE 6672 CORSAIR AVENUE PRESCOTT, AZ 86301	MONIQUE HOLLIDAY	(928) 443-6612
PHONE/COMMUNICATION	CENTURYLINK 1445 MASONRY WAY PRESCOTT, AZ 86301	DELL HOWARD	(928) 649-9318
NATURAL GAS	UNISOURCE 6405 WILKINSON DRIVE PRESCOTT, AZ 86301	MALI ROSS	(928) 771-7227
CABLE TELEVISION	SPARKLIGHT 3801 TOWER ROAD PRESCOTT, AZ 86305	DOUG HAMILTON	(928) 443-3305
WATER & SEWER	CITY OF PRESCOTT 433 N VIRGINIA STREET PRESCOTT, AZ 86301	GWEN ROWITSCH	(928) 777-1130

Call at least two full working days before you begin excavation.
ARIZONA 811 Arizona Blue Stake, Inc.
Dial 8-1-1 or 1-800-STAKE-IT (782-5348)
In Maricopa County: (602) 263-1100

FLOODPLAIN NOTE

THIS PROJECT IS LOCATED ON FEMA FLOOD INSURANCE RATE MAP (FIRM) 04025C1693H, EFFECTIVE MARCH 6, 2018 AND IS NOT IMPACTED BY THE FEMA DELINEATED 100-YR FLOODPLAIN.

PROJECT BASIS OF BEARING

THE BASIS OF BEARING FOR THIS PROJECT IS N32°06'48"E A DISTANCE OF 157.51 FEET ALONG THE CHORD FOR THE NORTHWESTERLY RIGHT OF WAY CURVE FOR THE FORMER LOT 68 BETWEEN TWO 1/2" REBARS WITH CAP RLS 22752

REFERENCE MARK	NORTHING	EASTING	ELEVATION (88)
RM 1	627719.156	620712.897	5025.189
RM 2	627852.685	620796.701	5026.217

THE COORDINATES AS DEPICTED HEREON REFLECT THE CITY OF PRESCOTT COORDINATE SYSTEM AS PUBLISHED BY THE CITY OF PRESCOTT AND AVAILABLE ON THEIR WEBSITE.

PROJECT AREA SUMMARY

PROJECT SITE AREA = 3.33 ACRES
DISTURBED AREA = 0.86 ACRES

FINISHED GRADE
ESTIMATED EARTHWORK
RAW CUT = 210 CY
RAW FILL = 1,010 CY
NET = 800 CY (IMPORT)

PROJECT OWNER
JSC CONTRACTING, INC.
230 N. McCORMICK STREET
PRESCOTT, ARIZONA 86301

ARCHITECT
W. ALAN KENSON & ASSOCIATES, P.C.
P.O. BOX 11593
PRESCOTT, ARIZONA 86304
(928) 443-5812

CIVIL ENGINEER
GRANITE BASIN ENGINEERING,INC
1981 COMMERCE CENTER CIRCLE, SUITE B
PRESCOTT, ARIZONA 86301
(928) 717-0171
CONTACT: BEN B. HUZA, P.E.
GBE PROJECT #20113

STRUCTURAL ENGINEER
SIMPLY STRUCTURAL, INC.
730 N. 52nd STREET, SUITE 105
PHOENIX, ARIZONA 85008
(602) 443-0303

SHEET INDEX

NUMBER	SHEET	SHEET TITLE
1	C1	COVER
2	C2	GENERAL NOTES
3	C3	STANDARD DETAILS
4	C4	EXISTING SITE SURVEY MAP
5	C5	PROJECT SUMMARY MAP
6	C6	SITE CROSS SECTIONS
7	C7	GRADING, DRAINAGE, & UTILITY PLAN
8	C8	GSN AND RETAINING WALL DETAILS

APPROVED BY

CITY ENGINEER _____ DATE _____

UTILITIES MANAGER _____ DATE _____

Registered Professional Engineer (Civil) CERTIFICATE NO. 45636 BEN B. HUZA Date Signed 12/04/24 ARIZONA, U.S.A. Expires 12/31/24

NOT YET CONSTRUCTED

AS-BUILT CERTIFICATION

I HEREBY CERTIFY, TO THE BEST OF MY KNOWLEDGE, INFORMATION AND BELIEF, THAT THIS PROJECT HAS BEEN COMPLETED IN SUBSTANTIAL CONFORMANCE WITH THE APPROVED PLANS, SPECIFICATIONS AND REFERENCED STANDARDS, EXCEPT AS SHOWN HEREON; THAT THESE AS-BUILT PLANS REFLECT THE POSITION OF CONSTRUCTED IMPROVEMENTS BASED ON FIELD MEASUREMENTS; AND THAT THE MATERIALS USED IN CONSTRUCTION ARE AS SHOWN BASED ON FIELD OBSERVATION AND TEST RESULTS.

REVISIONS	BY
1 COP ROUND 1 COMMENTS	BH
2 COP ROUND 2 COMMENTS	BH

These drawings are the property of W. Alan Kenson & Associates P.C., and may not be reproduced in any way without the written consent of W. Alan Kenson & Associates, P.C.

W. Alan Kenson & Associates, P.C.
P 928-443-5812
F 928-443-5815
P.O. Box 11593
Prescott, AZ 86304
email: waka@cableone.net
www.kenson-associates.com
ARCHITECTURE & PLANNING

DRAWING: CIVIL IMPROVEMENT PLANS
COVER

PROJECT: JSC Contracting Building B
6601 Inter Cal Way
Prescott, AZ 86301

APN: 103-50-054D
CNPLANS B2407-176 6601 INTER CAL WAY PLANS

DRAWN BY BH
CHECKED BY TS/BH
DATE December 4, 2024
JOB NO. 799
SHEET C1

Dec 04, 2024 - 1:50pm FILE: Z:\Projects\2020\20113\DWG\CIVIL PLANS-P2\20113-01-C0VER-P2.dwg <<C3D_Imperial>>

1. ALL CONSTRUCTION SHALL CONFORM TO MARICOPA ASSOCIATION OF GOVERNMENTS (MAG), & CITY OF PRESCOTT (COP) CONSTRUCTION STANDARDS & SPECIFICATIONS, LATEST REVISIONS, UNLESS SPECIFICALLY APPROVED BY THE CITY AND NOTED ON THE PLANS, IN CONJUNCTION WITH THE LATEST REVISIONS OF THE MARICOPA ASSOCIATION OF GOVERNMENTS STANDARD SPECIFICATIONS AND DETAILS (MAG STANDARDS), UNLESS SPECIFICALLY MODIFIED ON THE PLANS.
2. IT SHALL BE THE CONTRACTOR'S RESPONSIBILITY TO OBTAIN COPIES OF MAG AND CITY OF PRESCOTT STANDARDS AND SPECIFICATIONS AS WELL AS ALL OTHER STANDARDS AND SPECIFICATIONS NECESSARY TO COMPLETELY AND ACCURATELY INTERPRET THESE PLANS.
3. ALL PLANS SIGNED BY THE CITY ENGINEER ARE NULL AND VOID ONE YEAR FROM DATE OF SIGNATURE IF CONSTRUCTION HAS NOT STARTED. RESUBMITTAL AND REVIEW SHALL BE REQUIRED, AS PER CURRENT CODE.
4. ALL QUANTITIES SHOWN ON THE PLANS ARE APPROXIMATE, AND ARE NOT VERIFIED BY THE PUBLIC WORKS DIRECTOR, AND ARE FURNISHED SOLELY FOR THE CONTRACTOR'S CONVENIENCE. THEY DO NOT NECESSARILY CORRESPOND TO BID SCHEDULE ITEMS. PAYMENT SHALL BE BASED ON BID SCHEDULE ITEMS FOR ACTUAL QUANTITIES PROVIDED AND INSTALLED. THE CONTRACTOR SHALL NOT BE RELIEVED OF HIS RESPONSIBILITY FOR INDEPENDENTLY ESTIMATING MORE QUANTITIES PRIOR TO BIDDING.
5. CITY OF PRESCOTT PUBLIC WORKS DEPARTMENT PERMIT(S) WILL BE REQUIRED FOR ALL OFF-SITE CONSTRUCTION AND CONSTRUCTION WITHIN THE PUBLIC RIGHT OF WAY.
6. ALL OTHER PERMITS REQUIRED BY OTHER AGENCIES TO OBTAIN, AT HIS OWN EXPENSE, SUCH PERMITS AS ARE REQUIRED PRIOR TO THE ANNOUNCEMENT OF BIDS.
7. THE PUBLIC WORKS DEPARTMENT SHALL BE NOTIFIED A MINIMUM OF 24 HOURS PRIOR TO BEGINNING ANY CONSTRUCTION IN THE PUBLIC RIGHT OF WAY.
8. ANY WORK PERFORMED WITHOUT THE KNOWLEDGE AND APPROVAL OF THE PUBLIC WORKS DIRECTOR AND/OR ALL WORK MATERIALS NOT IN CONFORMATION WITH THE PLANS AND SPECIFICATIONS IS SUBJECT TO REMOVAL AND REPLACEMENT AT THE CONTRACTOR'S EXPENSE.
9. A THOROUGH ATTEMPT HAS BEEN MADE TO SHOW THE LOCATION OF ALL UNDERGROUND OBSTRUCTIONS AND UTILITY LINES IN THE WORK AREA. THE ENGINEER AND THE CITY OF PRESCOTT WILL NOT SHARE RESPONSIBILITY FOR ANY DAMAGE TO UNDERGROUND UTILITIES NOT SHOWN OR INCORRECTLY SHOWN ON THE CONTRACT DRAWINGS. THE CONTRACTOR SHALL NOT BE RELIEVED OF RESPONSIBILITY FOR MAKING A COMPLETE AND ACCURATE ON-SITE DETERMINATION OF THE LOCATIONS, MATERIALS, DEPTH, AND SIZE OF ALL UTILITIES, STRUCTURES, AND FIELD CONDITIONS WHICH MAY AFFECT THE PROGRESS OF THE WORK. THE CONTRACTOR SHALL BE RESPONSIBLE FOR ANY DAMAGE TO STRUCTURES AND UTILITIES ENCOUNTERED DURING CONSTRUCTION AND SHALL FIELD EXPOSE EXISTING UNDERGROUND UTILITIES PRIOR TO TRENCHING IN THE TRUNCH WORK.
10. THE CONTRACTOR IS REQUIRED TO CONTACT BLUE STAKE (1-800-STAKE(IT)) A MINIMUM OF TWO WORKING DAYS (48) HOURS PRIOR TO COMMENCEMENT OF CONSTRUCTION. THE APPROPRIATE UTILITY COMPANIES SHALL BE NOTIFIED BY THE CONTRACTOR PRIOR TO ANY CONSTRUCTION. THE CONTRACTOR SHALL CONTACT THE PUBLIC WORKS DIRECTOR FOR RELOCATION AND/OR SUPPORT OF ALL UTILITIES, POWER POLES, ETC., THAT MAY BE NECESSARY.
12. THE CONTRACTOR SHALL BE RESPONSIBLE FOR SUBMITTING TO THE PUBLIC WORKS DEPARTMENT FOR APPROVAL TRAFFIC CONTROL PLANS PRIOR TO BEGINNING CONSTRUCTION. THE CONTRACTOR SHALL DETERMINE AND SUBMIT FOR APPROVAL THE EXACT SIGNING/TRAFFIC CONTROL DEVICES NECESSARY AND ALL TRAFFIC CONTROL WORK SHALL BE IN ACCORDANCE WITH THE LATEST REVISIONS THEREOF. NO STREET IS TO BE CLOSED, RESTRICTED, OR CONSTRUCTED UPON UNTIL A CONTRACTOR CONTROL PLAN IS PREPARED BY THE CONTRACTOR AND SUBMITTED TO THE PUBLIC WORKS DIRECTOR ONE WEEK IN ADVANCE FOR REVIEW AND APPROVAL.
13. ALL PROPERTY OWNERS/TENANTS ADJACENT TO THE WORK SHALL BE NOTIFIED A MINIMUM OF 24 HOURS PRIOR TO ANY CONSTRUCTION.
14. THE CONTRACTOR SHALL BE RESPONSIBLE FOR CONSTRUCTION SURVEYING AND LAYOUT WITH CONTROL PROVIDED BY THE DESIGN ENGINEER OR HIS DESIGNEE.
15. THE CONTRACTOR IS RESPONSIBLE FOR QUALITY CONTROL MEASURES SUFFICIENT TO PRODUCE MATERIALS AND WORKMANSHIP OF ACCEPTABLE QUALITY. PRIOR TO CONSTRUCTION THE CONTRACTOR SHALL SUBMIT A QUALITY CONTROL PLAN. THE CONTRACTOR AT HIS OWN EXPENSE SHALL PROVIDE AN INDEPENDENT GEOTECHNICAL FIRM TO PERFORM QUALITY CONTROL TESTING SUCH AS SOILS AND CONCRETE TESTING, AND FULL TIME ASPHALTIC CONCRETE LAYDOWN COMPACTION TESTING AND ADEQUATE PLANT CONTROL FOR EACH PAVING DAY. THE CITY, BY NO MEANS, CONTRACT, WILL BE RESPONSIBLE FOR QUALITY ASSURANCE TESTING AS IT MAY DEEM NECESSARY.
16. THE CONTRACTOR WILL BE RESPONSIBLE FOR ALL COSTS OF TESTING AND INSPECTION, INCLUDING THE PRESENCE OF CITY INSPECTORS, REQUIRED AT NIGHT OR ON WEEKENDS.
17. THE CONTRACTOR SHALL BE RESPONSIBLE FOR ALL RE-WORK AND/OR REMOVAL AND REPLACEMENT OF ALL MATERIALS REPRESENTED BY FAILING TESTS OR SUBSTANDARD WORKMANSHIP.
18. THE CONTRACTOR SHALL IMPLEMENT BEST-HOUSE-KEEPING MEASURES, AND EROSION AND SEDIMENT CONTROL MEASURES, TO PREVENT THE TRANSPORT OF CONSTRUCTION MATERIALS INTO DRAINAGE INLETS, STORM DRAIN MANHOLES, UTILITY STRUCTURES, OR ONTO ADJACENT STREETS AND PROPERTIES.
19. APPROVAL OF A PORTION OF THE WORK IN PROGRESS DOES NOT GUARANTEE ITS FINAL ACCEPTANCE. TESTING AND EVALUATION MAY CONTINUE UNTIL THE WRITTEN FINAL ACCEPTANCE OF A COMPLETE AND WORKABLE UNIT.
20. THE CITY OF PRESCOTT MAY SUSPEND THE WORK BY WRITTEN NOTICE WHEN, IN ITS JUDGEMENT, PROGRESS IS UNSATISFACTORY, WORK BEING DONE IS UNAUTHORIZED OR DEFECTIVE, WEATHER CONDITIONS ARE UNSUITABLE, OR THERE IS A DANGER TO THE PUBLIC HEALTH AND SAFETY.
21. ALL OBSTRUCTIONS IN THE RIGHT OF WAY SHALL BE REMOVED BEFORE ANY CONSTRUCTION IS PERMITTED.
22. REMOVAL OF STRUCTURES AND OBSTRUCTIONS AS NECESSARY TO COMPLETE THE WORK, OTHER THAN THOSE NOT SPECIFICALLY SCHEDULED ON THE PLANS TO BE THE CONTRACT, NO SEPARATE MEASUREMENT OR OR PAYMENT FOR UNSCHEDULED REMOVAL ITEMS WILL BE MADE.
23. CLEARING AND GRUBBING IS CONSIDERED INCIDENTAL TO THE WORK UNLESS SPECIFICALLY IDENTIFIED IN THE BID SCHEDULE. NO SEPARATE MEASUREMENT OR OR PAYMENT FOR CLEARING AND GRUBBING AND TREE REMOVAL WILL BE MADE. THE USE OF ALL EXCAVATION, EMBANKMENTS, AND FILLS SHALL FIRST BE CLEARED OF STUMPS, TRASH, WEEDS, RUBBISH, TOPSOIL, AND LOOSE BOULDERS. SHALL BE REMOVED AND DISPOSED OF PRIOR TO BIDDING THE CONTRACTOR MUST SATISFY HIMSELF REGARDING THE CHARACTER OF THE SUBSOILS TO INCLUDE THE AMOUNT OF LOAM, ETC. IS SUBJECT TO REMOVAL & REPLACEMENT AT THE CONTRACTOR'S EXPENSE. ANY OTHER MATERIAL TO BE ENCOUNTERED AND WORK TO BE PERFORMED.
24. THE CONTRACTOR SHALL BE RESPONSIBLE FOR PROTECTING ALL ADJACENT TO EXISTING PROPERTIES AND IMPROVEMENTS ANY DAMAGED DURING CONSTRUCTION TO COMPLY WITH SPECIFICATIONS & TO COMPLETE THE WORK.
25. THE CONTRACTOR SHALL KEEP SUITABLE EQUIPMENT ON HAND WITH THE PUBLIC WORKS DEPARTMENT OR THEIR REPRESENTATIVE. PRIVATE DEVELOPMENTS SHALL PROVIDE FOR INDEPENDENT DEPARTMENT OR THEIR REPRESENTATIVE.
10. CONTRACTOR TO NOTIFY PROJECT ENGINEER 72 HOURS (3 WORKING DAYS) IN ADVANCE OF CONSTRUCTION TO SCHEDULE CONSTRUCTION CONTROL STAKING.
11. THE CONTRACTOR IS TO UNCOVER ALL EXISTING LINES BEING TIED INTO AND VERIFY GRADES, MATERIAL, SIZE & ELEVATIONS BEFORE COMMENCING CONSTRUCTION & ORDERING MATERIALS.
12. IT IS THE CONTRACTOR'S RESPONSIBILITY TO LOCATE ALL UNDERGROUND PIPELINES, TELEPHONE & ELECTRICAL SERVICES, CONDUITS & PROTECTION IN ADVANCE OF ANY CONSTRUCTION & OBSERVE ALL POSSIBLE PRECAUTIONS TO AVOID ANY DAMAGE TO SUCH. THE ENGINEER &/OR OWNER WILL NOT GUARANTEE ANY LOCATIONS AS SHOWN ON THESE PLANS, OR THOSE OMITTED FROM SAME.
13. CONTRACTOR SHALL NOTIFY BLUE STAKE, INC. (1-800-STAKE(IT) (1-800-782-5348) AT LEAST 48 HOURS PRIOR TO CONSTRUCTION.
14. CONTRACTOR SHALL VERIFY ALL QUANTITIES SHOWN & MAKE HIS BID BASED UPON THOSE VERIFICATIONS. ANY DISCREPANCY IN QUANTITIES IS FOUND, THE CONTRACTOR SHALL NOTIFY THE ENGINEER IMMEDIATELY.
15. ARIZONA DEPARTMENT OF ENVIRONMENTAL QUALITY REQUIREMENTS MUST BE COMPLIED WITH.
16. ARIZONA DEPARTMENT OF ENVIRONMENTAL QUALITY REQUIREMENTS SHALL APPLY WHEN MORE STRINGENT THAN THE MAG OR CITY OF PRESCOTT STANDARD SPECIFICATIONS FOR PUBLIC WORKS PROJECTS. IN ADDITION, THEY CONTAIN MINIMUM ALLOWABLE SEWER LINE/PRESSURE SEWER LINE EXFILTRATION-INFILTRATION RATES.
17. ALL PLANS SIGNED BY THE CITY ARE NULL & VOID ONE YEAR FROM DATE OF SIGNATURE IF CONSTRUCTION HAS NOT STARTED AND/OR IS NOT ACTIVELY PROGRESSING.
18. PROJECT ENGINEER SHALL BE RESPONSIBLE FOR SUBMITTING TRAFFIC CONTROL PLANS WHICH SHALL BE MADE A PART OF THE PLAN REVIEW REQUEST TO THE CITY ENGINEER FOR APPROVAL.
19. WATER-SEWER SEPARATION SHALL BE PURSUANT TO AAC R-18-5-502C.
20. ALL TRENCHES & BEDDING SHALL BE PER COP DETAIL 200P & TECHNICAL SPECIFICATIONS.
21. ALL REVISIONS TO ORIGINAL PLANS MUST BE APPROVED BY THE PUBLIC WORKS DIRECTOR PRIOR TO CONSTRUCTION. UNAPPROVED REVISIONS ARE SUBJECT TO REMOVAL & REPLACEMENT AT THE CONTRACTOR'S EXPENSE.
22. SEWER MANHOLES EXFILTRATION TESTS SHALL BE DONE ON 100% OF ALL MANHOLES. VACUUM TESTING IN ACCORDANCE WITH CITY STANDARDS MAY BE USED IN LIEU OF EXFILTRATION TEST. THE CONTRACTOR SHALL TEST EACH MANHOLE USING ONE OF THE FOLLOWING TEST PROTOCOLS:
    24A. WATERTIGHTNESS TESTING BY FILLING THE MANHOLE WITH WATER. THE CONTRACTOR SHALL ENSURE THAT THE DROP IN WATER LEVEL FOLLOWING PRESOAKING DOES NOT EXCEED 0.00034 OF THE TOTAL MANHOLE VOLUME PER HOUR.
    24B. NEGATIVE AIR PRESSURE TESTING USING THE "STANDARD TEST METHOD FOR LOW PRESSURE AIR TEST OF MANHOLES" (VACUUM TEST, C1244-02e1(2002)), PUBLISHED BY THE AMERICAN SOCIETY FOR TESTING AND MATERIALS. THIS MANHOLE TESTING SPECIFICATION & DOES NOT INCLUDE ANY LATER AMENDMENTS OR EDITIONS OF THE INCORPORATED MATERIAL. A MAY BE MOVED AT THE ARIZONA DEPARTMENT OF ENVIRONMENTAL QUALITY, 1110 W. WASHINGTON, PHOENIX, AZ. 85007, OR OBTAINED FROM THE AMERICAN SOCIETY FOR TESTING AND MATERIALS, 100 BARR HARBOR DRIVE, WEST CONSHOHOCKEN, PA. 19428-2959.
25. SEWER LINE DEFLECTION TESTS WITH AN APPROPRIATELY SIZED MANDREL SHALL BE DONE ON 100% OF ALL SEWER LINES.
26. THE CONTRACTOR SHALL PERFORM A VIDEO INSPECTION OF ALL SEWER MAINS AND LATERALS INSTALLED WITHIN THE CITY'S COLLECTION SYSTEM UTILIZING A SEWER CCTV SYSTEM ACCEPTABLE TO THE CITY ENGINEER. THE CONTRACTOR SHALL CLEAN ANY PORTION OF THE PAVEMENT STRUCTURAL SECTION. THE INSPECTION SHALL COMPLY WITH THE CITY'S VIDEO ACCEPTANCE PROCEDURE. THE CONTRACTOR SHALL PROVIDE 72 HOURS ADVANCE NOTICE FOR CITY STAFF TO BE PRESENT DURING THE VIDEO OPERATION AND SHALL PROVIDE THE CITY A VIDEO DVD AND HARD COPY OF THE INSPECTION REPORT UPON COMPLETION.
27. SEWER LINES SHALL HAVE MIN. 3 FEET OF EARTH COVER MEETING THE GOVERNING CRITERIA WITH ADEQ. SEWER LINES SHALL BE CONSTRUCTED OF PVC, REVISED 2004, PUBLISHED BY THE MARICOPA ASSOCIATION OF GOVERNMENTS, & "RIGID PIPE BEDDING FOR SANITARY SEWERS" (MAG 601, REVISED FEB. 2002), PUBLISHED BY PIMA COUNTY WASTEWATER MANAGEMENT.
28. PRESSURE SEWER MAINS AND SERVICE LATERALS (UPS) SHALL BE SUBJECT TO A PRESSURE & LEAKAGE TEST IN ACCORDANCE WITH AWWA-C-600 STANDARD. TEST PRESSURE SHALL BE A MINIMUM OF 150 PSI OR 1.5 TIMES THE WORKING PRESSURE, WHICHEVER IS GREATER. TESTING SHALL BE DONE AFTER BACKFILL TO SUBGRADE.

COP STANDARD DETAIL	GENERAL NOTES	CITY ENGINEER	REVISED: 07/16	DETAIL No. 101P

1. ALL WORK SHALL CONFORM TO MARICOPA ASSOCIATION OF GOVERNMENTS (MAG), & CITY OF PRESCOTT (COP) CONSTRUCTION STANDARDS & SPECIFICATIONS, WHICH ARE ON FILE IN THE OFFICE OF THE CITY ENGINEER.
2. ALL EXISTING FRAMES, COVERS, VALVE BOXES, & MANHOLES SHALL BE EITHER REPLACED OR ADJUSTED TO FINISH GRADE DEPENDING ON PLAN CALL OUT UPON COMPLETION OF PAVING, UTILITY, OR RELATED CONSTRUCTION.
3. ANY QUANTITIES SHOWN ON PLANS ARE NOT VERIFIED BY THE PUBLIC WORKS UTILITIES DIRECTOR.
4. ACCEPTANCE OF THE COMPLETED WORK WILL NOT BE GIVEN UNTIL 3 MIL MYLAR & CAD RECORD DRAWINGS, AS-BUILT PLANS IN CITY OF PRESCOTT SURVEY DATUM & COORDINATES HAVE BEEN SUBMITTED & SEALED BY A REGISTERED PROFESSIONAL ENGINEER AND APPROVED BY THE CITY ENGINEER OF PRESCOTT.
5. CITY OF PRESCOTT PUBLIC WORKS UTILITIES SHALL BE NOTIFIED A MINIMUM OF 24 HOURS PRIOR TO THE START OF ANY WORK.
6. ALL WORK & MATERIALS WHICH DO NOT CONFORM TO THE SPECIFICATIONS ARE SUBJECT TO REMOVAL & REPLACEMENT AT THE CONTRACTOR'S EXPENSE.
7. ANY WORK PERFORMED WITHOUT THE KNOWLEDGE OF THE CITY INSPECTOR OR HIS REPRESENTATIVE IS SUBJECT TO REMOVAL & REPLACEMENT AT THE CONTRACTOR'S EXPENSE.
8. THE CONTRACTOR SHALL PROVIDE SUFFICIENT MEN, EQUIPMENT, & MATERIAL ON THE JOB AT ALL TIMES DURING CONSTRUCTION TO COMPLY WITH SPECIFICATIONS & TO COMPLETE THE WORK.
9. OP INSPECTORS TO BE DONE BY PRESCOTT PUBLIC WORKS DEPARTMENT OR THEIR REPRESENTATIVE. PRIVATE DEVELOPMENTS SHALL PROVIDE FOR INDEPENDENT DEPARTMENT OR REPRESENTATIVE.
10. CONTRACTOR TO NOTIFY PROJECT ENGINEER 72 HOURS (3 WORKING DAYS) IN ADVANCE OF CONSTRUCTION TO SCHEDULE CONSTRUCTION CONTROL STAKING.
11. THE CONTRACTOR IS TO UNCOVER ALL EXISTING LINES BEING TIED INTO AND VERIFY GRADES, MATERIAL, SIZE & ELEVATIONS BEFORE COMMENCING CONSTRUCTION & ORDERING MATERIALS.
12. IT IS THE CONTRACTOR'S RESPONSIBILITY TO LOCATE ALL UNDERGROUND PIPELINES, TELEPHONE & ELECTRICAL SERVICES, CONDUITS & PROTECTION IN ADVANCE OF ANY CONSTRUCTION & OBSERVE ALL POSSIBLE PRECAUTIONS TO AVOID ANY DAMAGE TO SUCH. THE ENGINEER &/OR OWNER WILL NOT GUARANTEE ANY LOCATIONS AS SHOWN ON THESE PLANS, OR THOSE OMITTED FROM SAME.
13. CONTRACTOR SHALL NOTIFY BLUE STAKE, INC. (1-800-STAKE(IT) (1-800-782-5348) AT LEAST 48 HOURS PRIOR TO CONSTRUCTION.
14. CONTRACTOR SHALL VERIFY ALL QUANTITIES SHOWN & MAKE HIS BID BASED UPON THOSE VERIFICATIONS. ANY DISCREPANCY IN QUANTITIES IS FOUND, THE CONTRACTOR SHALL NOTIFY THE ENGINEER IMMEDIATELY.
15. ARIZONA DEPARTMENT OF ENVIRONMENTAL QUALITY REQUIREMENTS MUST BE COMPLIED WITH.
16. ARIZONA DEPARTMENT OF ENVIRONMENTAL QUALITY REQUIREMENTS SHALL APPLY WHEN MORE STRINGENT THAN THE MAG OR CITY OF PRESCOTT STANDARD SPECIFICATIONS FOR PUBLIC WORKS PROJECTS. IN ADDITION, THEY CONTAIN MINIMUM ALLOWABLE SEWER LINE/PRESSURE SEWER LINE EXFILTRATION-INFILTRATION RATES.
17. ALL PLANS SIGNED BY THE CITY ARE NULL & VOID ONE YEAR FROM DATE OF SIGNATURE IF CONSTRUCTION HAS NOT STARTED AND/OR IS NOT ACTIVELY PROGRESSING.
18. PROJECT ENGINEER SHALL BE RESPONSIBLE FOR SUBMITTING TRAFFIC CONTROL PLANS WHICH SHALL BE MADE A PART OF THE PLAN REVIEW REQUEST TO THE CITY ENGINEER FOR APPROVAL.
19. WATER-SEWER SEPARATION SHALL BE PURSUANT TO AAC R-18-5-502C.
20. ALL TRENCHES & BEDDING SHALL BE PER COP DETAIL 200P & TECHNICAL SPECIFICATIONS.
21. ALL REVISIONS TO ORIGINAL PLANS MUST BE APPROVED BY THE PUBLIC WORKS DIRECTOR PRIOR TO CONSTRUCTION. UNAPPROVED REVISIONS ARE SUBJECT TO REMOVAL & REPLACEMENT AT THE CONTRACTOR'S EXPENSE.
22. SEWER MANHOLES EXFILTRATION TESTS SHALL BE DONE ON 100% OF ALL MANHOLES. VACUUM TESTING IN ACCORDANCE WITH CITY STANDARDS MAY BE USED IN LIEU OF EXFILTRATION TEST. THE CONTRACTOR SHALL TEST EACH MANHOLE USING ONE OF THE FOLLOWING TEST PROTOCOLS:
    24A. WATERTIGHTNESS TESTING BY FILLING THE MANHOLE WITH WATER. THE CONTRACTOR SHALL ENSURE THAT THE DROP IN WATER LEVEL FOLLOWING PRESOAKING DOES NOT EXCEED 0.00034 OF THE TOTAL MANHOLE VOLUME PER HOUR.
    24B. NEGATIVE AIR PRESSURE TESTING USING THE "STANDARD TEST METHOD FOR LOW PRESSURE AIR TEST OF MANHOLES" (VACUUM TEST, C1244-02e1(2002)), PUBLISHED BY THE AMERICAN SOCIETY FOR TESTING AND MATERIALS. THIS MANHOLE TESTING SPECIFICATION & DOES NOT INCLUDE ANY LATER AMENDMENTS OR EDITIONS OF THE INCORPORATED MATERIAL. A MAY BE MOVED AT THE ARIZONA DEPARTMENT OF ENVIRONMENTAL QUALITY, 1110 W. WASHINGTON, PHOENIX, AZ. 85007, OR OBTAINED FROM THE AMERICAN SOCIETY FOR TESTING AND MATERIALS, 100 BARR HARBOR DRIVE, WEST CONSHOHOCKEN, PA. 19428-2959.
25. SEWER LINE DEFLECTION TESTS WITH AN APPROPRIATELY SIZED MANDREL SHALL BE DONE ON 100% OF ALL SEWER LINES.
26. THE CONTRACTOR SHALL PERFORM A VIDEO INSPECTION OF ALL SEWER MAINS AND LATERALS INSTALLED WITHIN THE CITY'S COLLECTION SYSTEM UTILIZING A SEWER CCTV SYSTEM ACCEPTABLE TO THE CITY ENGINEER. THE CONTRACTOR SHALL CLEAN ANY PORTION OF THE PAVEMENT STRUCTURAL SECTION. THE INSPECTION SHALL COMPLY WITH THE CITY'S VIDEO ACCEPTANCE PROCEDURE. THE CONTRACTOR SHALL PROVIDE 72 HOURS ADVANCE NOTICE FOR CITY STAFF TO BE PRESENT DURING THE VIDEO OPERATION AND SHALL PROVIDE THE CITY A VIDEO DVD AND HARD COPY OF THE INSPECTION REPORT UPON COMPLETION.
27. SEWER LINES SHALL HAVE MIN. 3 FEET OF EARTH COVER MEETING THE GOVERNING CRITERIA WITH ADEQ. SEWER LINES SHALL BE CONSTRUCTED OF PVC, REVISED 2004, PUBLISHED BY THE MARICOPA ASSOCIATION OF GOVERNMENTS, & "RIGID PIPE BEDDING FOR SANITARY SEWERS" (MAG 601, REVISED FEB. 2002), PUBLISHED BY PIMA COUNTY WASTEWATER MANAGEMENT.
28. PRESSURE SEWER MAINS AND SERVICE LATERALS (UPS) SHALL BE SUBJECT TO A PRESSURE & LEAKAGE TEST IN ACCORDANCE WITH AWWA-C-600 STANDARD. TEST PRESSURE SHALL BE A MINIMUM OF 150 PSI OR 1.5 TIMES THE WORKING PRESSURE, WHICHEVER IS GREATER. TESTING SHALL BE DONE AFTER BACKFILL TO SUBGRADE.

COP STANDARD DETAIL	WATER PLAN GENERAL NOTES	CITY ENGINEER	REVISED: 07/16	DETAIL No. 103P

1. ALL WORK SHALL CONFORM TO MARICOPA ASSOCIATION OF GOVERNMENTS (MAG), & CITY OF PRESCOTT (COP) CONSTRUCTION STANDARDS & SPECIFICATIONS, WHICH ARE ON FILE IN THE OFFICE OF THE CITY ENGINEER.
2. ALL EXISTING FRAMES, COVERS, VALVE BOXES, & MANHOLES SHALL BE EITHER REPLACED OR ADJUSTED TO FINISH GRADE DEPENDING ON PLAN CALL OUT UPON COMPLETION OF PAVING, UTILITY, OR RELATED CONSTRUCTION.
3. ANY QUANTITIES SHOWN ON PLANS ARE NOT VERIFIED BY THE PUBLIC WORKS UTILITIES DIRECTOR.
4. ACCEPTANCE OF THE COMPLETED WORK WILL NOT BE GIVEN UNTIL 3 MIL MYLAR & CAD RECORD DRAWINGS, AS-BUILT PLANS IN CITY OF PRESCOTT SURVEY DATUM & COORDINATES HAVE BEEN SUBMITTED & SEALED BY A REGISTERED PROFESSIONAL ENGINEER AND APPROVED BY THE CITY ENGINEER OF PRESCOTT.
5. CITY OF PRESCOTT PUBLIC WORKS UTILITIES SHALL BE NOTIFIED A MINIMUM OF 24 HOURS PRIOR TO THE START OF ANY WORK.
6. ALL WORK & MATERIALS WHICH DO NOT CONFORM TO THE SPECIFICATIONS ARE SUBJECT TO REMOVAL & REPLACEMENT AT THE CONTRACTOR'S EXPENSE.
7. ANY WORK PERFORMED WITHOUT THE KNOWLEDGE OF THE CITY INSPECTOR OR HIS REPRESENTATIVE IS SUBJECT TO REMOVAL & REPLACEMENT AT THE CONTRACTOR'S EXPENSE.
8. THE CONTRACTOR SHALL PROVIDE SUFFICIENT MEN, EQUIPMENT, & MATERIAL ON THE JOB AT ALL TIMES DURING CONSTRUCTION TO COMPLY WITH SPECIFICATIONS & TO COMPLETE THE WORK.
9. OP INSPECTORS TO BE DONE BY PRESCOTT PUBLIC WORKS DEPARTMENT OR THEIR REPRESENTATIVE. PRIVATE DEVELOPMENTS SHALL PROVIDE FOR INDEPENDENT DEPARTMENT OR REPRESENTATIVE.
10. CONTRACTOR TO NOTIFY PROJECT ENGINEER 72 HOURS (3 WORKING DAYS) IN ADVANCE OF CONSTRUCTION TO SCHEDULE CONSTRUCTION CONTROL STAKING.
11. THE CONTRACTOR IS TO UNCOVER ALL EXISTING LINES BEING TIED INTO AND VERIFY GRADES, MATERIAL, SIZE & ELEVATIONS BEFORE COMMENCING CONSTRUCTION & ORDERING MATERIALS.
12. IT IS THE CONTRACTOR'S RESPONSIBILITY TO LOCATE ALL UNDERGROUND PIPELINES, TELEPHONE & ELECTRICAL SERVICES, CONDUITS & PROTECTION IN ADVANCE OF ANY CONSTRUCTION & OBSERVE ALL POSSIBLE PRECAUTIONS TO AVOID ANY DAMAGE TO SUCH. THE ENGINEER &/OR OWNER WILL NOT GUARANTEE ANY LOCATIONS AS SHOWN ON THESE PLANS, OR THOSE OMITTED FROM SAME.
13. CONTRACTOR SHALL NOTIFY BLUE STAKE, INC. (1-800-STAKE(IT) (1-800-782-5348) AT LEAST 48 HOURS PRIOR TO CONSTRUCTION.
14. CONTRACTOR SHALL VERIFY ALL QUANTITIES SHOWN & MAKE HIS BID BASED UPON THOSE VERIFICATIONS. ANY DISCREPANCY IN QUANTITIES IS FOUND, THE CONTRACTOR SHALL NOTIFY THE ENGINEER IMMEDIATELY.
15. ARIZONA DEPARTMENT OF ENVIRONMENTAL QUALITY REQUIREMENTS MUST BE COMPLIED WITH.
16. ARIZONA DEPARTMENT OF ENVIRONMENTAL QUALITY REQUIREMENTS SHALL APPLY WHEN MORE STRINGENT THAN THE MAG OR CITY OF PRESCOTT STANDARD SPECIFICATIONS FOR PUBLIC WORKS PROJECTS. IN ADDITION, THEY CONTAIN MINIMUM ALLOWABLE SEWER LINE/PRESSURE SEWER LINE EXFILTRATION-INFILTRATION RATES.
17. ALL PLANS SIGNED BY THE CITY ARE NULL & VOID ONE YEAR FROM DATE OF SIGNATURE IF CONSTRUCTION HAS NOT STARTED AND/OR IS NOT ACTIVELY PROGRESSING.
18. PROJECT ENGINEER SHALL BE RESPONSIBLE FOR SUBMITTING TRAFFIC CONTROL PLANS WHICH SHALL BE MADE A PART OF THE PLAN REVIEW REQUEST TO THE CITY ENGINEER FOR APPROVAL.
19. WATER-SEWER SEPARATION SHALL BE PURSUANT TO AAC R-18-5-502C.
20. ALL TRENCHES & BEDDING SHALL BE PER COP DETAIL 200P & TECHNICAL SPECIFICATIONS.
21. ALL REVISIONS TO ORIGINAL PLANS MUST BE APPROVED BY THE PUBLIC WORKS DIRECTOR PRIOR TO CONSTRUCTION. UNAPPROVED REVISIONS ARE SUBJECT TO REMOVAL & REPLACEMENT AT THE CONTRACTOR'S EXPENSE.
22. SEWER MANHOLES EXFILTRATION TESTS SHALL BE DONE ON 100% OF ALL MANHOLES. VACUUM TESTING IN ACCORDANCE WITH CITY STANDARDS MAY BE USED IN LIEU OF EXFILTRATION TEST. THE CONTRACTOR SHALL TEST EACH MANHOLE USING ONE OF THE FOLLOWING TEST PROTOCOLS:
    24A. WATERTIGHTNESS TESTING BY FILLING THE MANHOLE WITH WATER. THE CONTRACTOR SHALL ENSURE THAT THE DROP IN WATER LEVEL FOLLOWING PRESOAKING DOES NOT EXCEED 0.00034 OF THE TOTAL MANHOLE VOLUME PER HOUR.
    24B. NEGATIVE AIR PRESSURE TESTING USING THE "STANDARD TEST METHOD FOR LOW PRESSURE AIR TEST OF MANHOLES" (VACUUM TEST, C1244-02e1(2002)), PUBLISHED BY THE AMERICAN SOCIETY FOR TESTING AND MATERIALS. THIS MANHOLE TESTING SPECIFICATION & DOES NOT INCLUDE ANY LATER AMENDMENTS OR EDITIONS OF THE INCORPORATED MATERIAL. A MAY BE MOVED AT THE ARIZONA DEPARTMENT OF ENVIRONMENTAL QUALITY, 1110 W. WASHINGTON, PHOENIX, AZ. 85007, OR OBTAINED FROM THE AMERICAN SOCIETY FOR TESTING AND MATERIALS, 100 BARR HARBOR DRIVE, WEST CONSHOHOCKEN, PA. 19428-2959.
25. SEWER LINE DEFLECTION TESTS WITH AN APPROPRIATELY SIZED MANDREL SHALL BE DONE ON 100% OF ALL SEWER LINES.
26. THE CONTRACTOR SHALL PERFORM A VIDEO INSPECTION OF ALL SEWER MAINS AND LATERALS INSTALLED WITHIN THE CITY'S COLLECTION SYSTEM UTILIZING A SEWER CCTV SYSTEM ACCEPTABLE TO THE CITY ENGINEER. THE CONTRACTOR SHALL CLEAN ANY PORTION OF THE PAVEMENT STRUCTURAL SECTION. THE INSPECTION SHALL COMPLY WITH THE CITY'S VIDEO ACCEPTANCE PROCEDURE. THE CONTRACTOR SHALL PROVIDE 72 HOURS ADVANCE NOTICE FOR CITY STAFF TO BE PRESENT DURING THE VIDEO OPERATION AND SHALL PROVIDE THE CITY A VIDEO DVD AND HARD COPY OF THE INSPECTION REPORT UPON COMPLETION.
27. SEWER LINES SHALL HAVE MIN. 3 FEET OF EARTH COVER MEETING THE GOVERNING CRITERIA WITH ADEQ. SEWER LINES SHALL BE CONSTRUCTED OF PVC, REVISED 2004, PUBLISHED BY THE MARICOPA ASSOCIATION OF GOVERNMENTS, & "RIGID PIPE BEDDING FOR SANITARY SEWERS" (MAG 601, REVISED FEB. 2002), PUBLISHED BY PIMA COUNTY WASTEWATER MANAGEMENT.
28. PRESSURE SEWER MAINS AND SERVICE LATERALS (UPS) SHALL BE SUBJECT TO A PRESSURE & LEAKAGE TEST IN ACCORDANCE WITH AWWA-C-600 STANDARD. TEST PRESSURE SHALL BE A MINIMUM OF 150 PSI OR 1.5 TIMES THE WORKING PRESSURE, WHICHEVER IS GREATER. TESTING SHALL BE DONE AFTER BACKFILL TO SUBGRADE.

COP STANDARD DETAIL	WASTEWATER PLAN GENERAL NOTES	CITY ENGINEER	REVISED: 07/16	DETAIL No. 104P

1. ALL GRADING SHALL CONFORM TO THE CURRENT CITY ADOPTED EDITION OF THE INTERNATIONAL BUILDING CODE, AND CITY OF PRESCOTT LAND DEVELOPMENT CODE (REFERENCE CITY OF PRESCOTT STANDARD SECTIONS).
2. ALL PROVISIONS OF THE PRELIMINARY SOILS REPORT PREPARED BY _____, DATED _____, SHALL BE COMPLIED WITH DURING OPERATIONS.
3. THIS PLAN IS FOR GRADING PURPOSES ONLY. APPROVAL OF THIS PLAN DOES NOT CONSTITUTE APPROVAL OF SWPPP LOCATIONS OR PRIVATE LOCATIONS OR SIZES, PARKING LOT LAYOUT, SEWER AND WATER FACILITIES, BUILDING LOCATIONS, OFF-SITE DRAINAGE FACILITIES OR OTHER ITEMS NOT RELATED DIRECTLY TO THE BASIC GRADING OPERATION.
4. CERTIFICATION FROM THE REGISTERED CIVIL ENGINEER AND SOILS/GEOLOGICAL ENGINEER (STATING THAT THE ROUGH GRADING HAS BEEN COMPLETED PRIOR TO THE APPROVED PLAN, AND A COMPACTION REPORT FROM THE

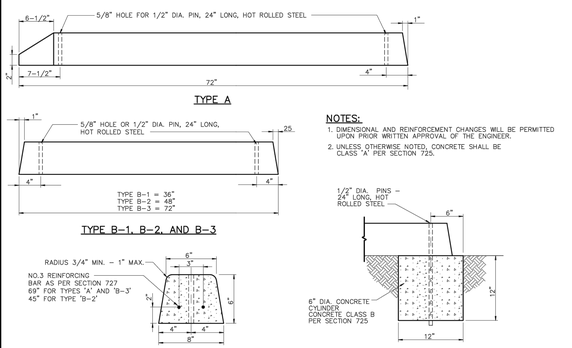

NOTES:

1. DIMENSIONAL AND REINFORCEMENT CHANGES WILL BE PERMITTED UPON PRIOR WRITTEN APPROVAL OF THE ENGINEER.
2. UNLESS OTHERWISE NOTED, CONCRETE SHALL BE CLASS "A" PER SECTION 725.

DETAIL NO.		STANDARD DETAIL		REVISED	DETAIL NO.
150	MARICOPA ASSOCIATION of GOVERNMENTS	ENGLISH	PRECAST SAFETY CURB	01-01-1998	150

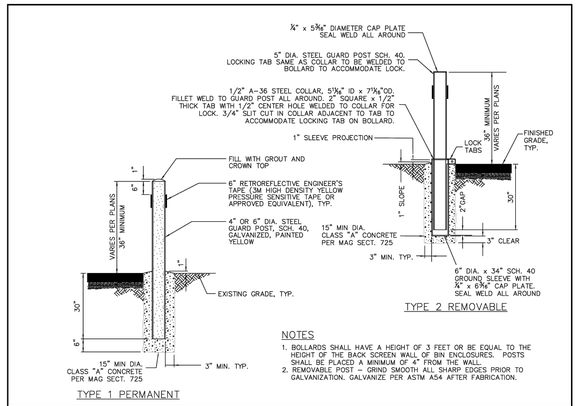

NOTES

1. BOLLARDS SHALL HAVE A HEIGHT OF 3 FEET OR BE EQUAL TO THE HEIGHT OF THE BACK SCREEN WALL OF BIN ENCLOSURES. POSTS SHALL BE PLACED A MINIMUM OF 4" FROM THE WALL.
2. REMOVABLE POST - GRIND SMOOTH ALL SHARP EDGES PRIOR TO GALVANIZATION. GALVANIZE PER ASTM A54 AFTER FABRICATION.

QUAD CITY STANDARD DETAIL	BOLLARD	REVISED: 07/16	DETAIL No. 140Q

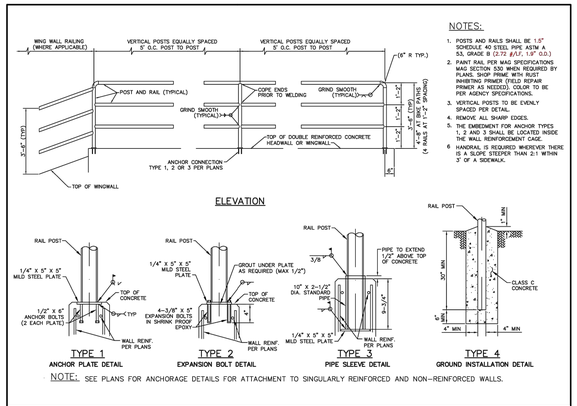

NOTES:

1. POSTS AND RAILS SHALL BE 1.5" SCHEDULE 40 STEEL PIPE ASTM A 53, GRADE B (2.72 #/LF, 1.9" O.D.)
2. PAINT RAIL PER MAG SPECIFICATIONS MAG SECTION 530 WHEN REQUIRED BY PLANS. SHOP PRIME WITH RUST INHIBITING PRIMER (FIELD REPAIR PRIMER AS NEEDED). COLOR TO BE PER AGENCY SPECIFICATIONS.
3. VERTICAL POSTS TO BE EVENLY SPACED PER DETAIL.
4. REMOVE ALL SHARP EDGES.
5. THE EMBEDMENT FOR ANCHOR TYPES 1, 2 AND 3 SHALL BE LOCATED INSIDE THE WALL REINFORCEMENT CAGE.
6. HANDRAIL IS REQUIRED WHEREVER THERE IS A SLOPE STEEPER THAN 2:1 WITHIN 3' OF A SIDEWALK.

NOTE: SEE PLANS FOR ANCHORAGE DETAILS FOR ATTACHMENT TO SINGULARLY REINFORCED AND NON-REINFORCED WALLS.

QUAD CITY STANDARD DETAIL	SAFETY RAIL	REVISED: X/17	DETAIL No. 145Q

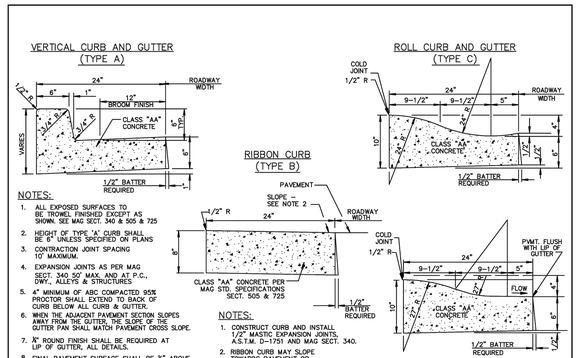

NOTES:

1. ALL EXPOSED SURFACES TO BE TROWEL FINISHED EXCEPT AS SHOWN. SEE MAG SECT. 340 & 505 & 725
2. HEIGHT OF TYPE "A" CURB SHALL BE 6" UNLESS SPECIFIED ON PLANS
3. CONTRACTION JOINT SPACING 10' MAXIMUM.
4. EXPANSION JOINTS AS PER MAG SECT. 340 50' MAX. AND AT P.C., DWY., ALLEYS & STRUCTURES
5. 4" MINIMUM OF ABC COMPACTED 95% PROCTOR SHALL EXTEND TO BACK OF CURB BELOW ALL CURB & GUTTER.
6. WHEN THE ADJACENT PAVEMENT SECTION SLOPES AWAY FROM THE GUTTER, THE SLOPE OF THE GUTTER PAN SHALL MATCH PAVEMENT CROSS SLOPE.
7. 3/4" ROUND FINISH SHALL BE REQUIRED AT LIP OF GUTTER, ALL DETAILS.
8. FINAL PAVEMENT SURFACE SHALL BE 3/4" ABOVE GUTTERS EXCEPT TYPE D AND WHERE GUTTER SLOPES TOWARD PAVEMENT.
9. 3 - 3/4"x12" DOWELS SHALL BE PLACED WHEN ATTACHING NEW CURB TO EXISTING CURB.

QUAD CITY STANDARD DETAIL	CURB AND GUTTER TYPES A, B, C AND D	REVISED: 07/16	DETAIL No. 220Q-1

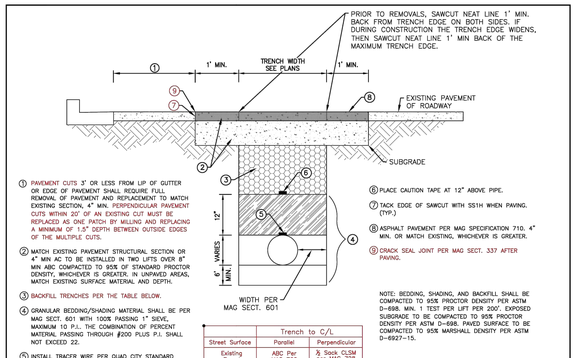

1. PAVEMENT CUTS 3' OR LESS FROM LIP OF GUTTER OR EDGE OF PAVEMENT SHALL REQUIRE FULL REMOVAL OF PAVEMENT AND REPLACEMENT TO MATCH EXISTING SECTION, 4" MIN. PERPENDICULAR PAVEMENT CUTS WITHIN 20' OF AN EXISTING CUT MUST BE REPLACED AS ONE PATCH BY MILLING AND REPLACING A MINIMUM OF 1.5" DEPTH BETWEEN OUTSIDE EDGES OF THE MULTIPLE CUTS.
2. MATCH EXISTING PAVEMENT STRUCTURAL SECTION OR 4" MIN AC TO BE INSTALLED IN TWO LIFTS OVER 8" MIN ABC COMPACTED TO 95% OF STANDARD PROCTOR DENSITY, WHICHEVER IS GREATER. IN UNPAVED AREAS, MATCH EXISTING SURFACE MATERIAL AND DEPTH.
3. BACKFILL TRENCHES PER THE TABLE BELOW.
4. GRANULAR BEDDING/SHADING MATERIAL SHALL BE PER MAG SECT. 601 WITH 100% PASSING 1" SIEVE, MAXIMUM 10 P.I., THE COMBINATION OF PERCENT MATERIAL PASSING THROUGH #200 PLUS P.I. SHALL NOT EXCEED 22.
5. INSTALL TRACER WIRE PER QUAD CITY STANDARD DETAIL 319G-1 ATTACHED TO TOP OF PIPE WITH 10 MIL PVC TAPE ON 6' CENTERS ON ALL AGENCY UTILITIES EXCEPT CITY OF PRESCOTT GRAVITY SEWER MAINS.
6. PLACE CAUTION TAPE AT 12" ABOVE PIPE.
7. TACK EDGE OF SAWCUT WITH SS1H WHEN PAVING. (TYP.)
8. ASPHALT PAVEMENT PER MAG SPECIFICATION 710. 4" MIN. OR MATCH EXISTING, WHICHEVER IS GREATER.
9. CRACK SEAL JOINT PER MAG SECT. 337 AFTER PAVING.

	Trench to C/L	
Street Surface	Parallel	Perpendicular
Existing Paved	ABC Per MAG 702	½ Sack CLSM per MAG 728
Unpaved Surface or New Street Construction	3" Minus Screened Native Material	

NOTE: BEDDING, SHADING, AND BACKFILL SHALL BE COMPACTED TO 95% PROCTOR DENSITY PER ASTM D-698, MIN. 1 TEST PER LIFT PER 200'. EXPOSED SUBGRADE TO BE COMPACTED TO 95% PROCTOR DENSITY PER ASTM D-698. PAVED SURFACE TO BE COMPACTED TO 95% MARSHALL DENSITY PER ASTM D-6927-15.

QUAD CITY STANDARD DETAIL	TRENCH BACKFILL AND SURFACE REPLACEMENT	REVISED: X/17	DETAIL No. 200Q-1

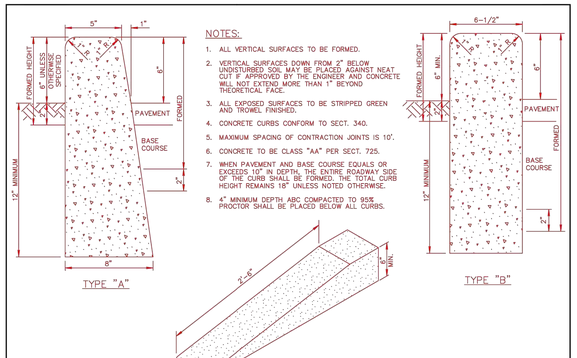

NOTES:

1. ALL VERTICAL SURFACES TO BE FORMED.
2. VERTICAL SURFACES DOWN FROM 2" BELOW UNDISTURBED SOIL MAY BE PLACED AGAINST NEAT CUT IF APPROVED BY THE ENGINEER AND CONCRETE WILL NOT EXTEND MORE THAN 1" BEYOND THEORETICAL FACE.
3. ALL EXPOSED SURFACES TO BE STRIPPED GREEN AND TROWEL FINISHED.
4. CONCRETE CURBS CONFORM TO SECT. 340.
5. MAXIMUM SPACING OF CONTRACTION JOINTS IS 10'.
6. CONCRETE TO BE CLASS "AA" PER SECT. 725.
7. WHEN PAVEMENT AND BASE COURSE EQUALS OR EXCEEDS 10" IN DEPTH, THE ENTIRE ROADWAY SIDE OF THE CURB SHALL BE FORMED. THE TOTAL CURB HEIGHT REMAINS 18" UNLESS NOTED OTHERWISE.
8. 4" MINIMUM DEPTH ABC COMPACTED TO 95% PROCTOR SHALL BE PLACED BELOW ALL CURBS.

QUAD CITY STANDARD DETAIL	SINGLE CURB - TYPES A, B, AND TERMINATION	REVISED: X/17	DETAIL No. 222Q

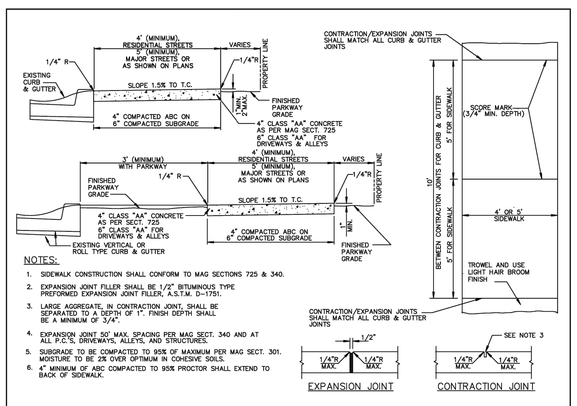

NOTES:

1. SIDEWALK CONSTRUCTION SHALL CONFORM TO MAG SECTIONS 725 & 340.
2. EXPANSION JOINT FILLER SHALL BE 1/2" BITUMINOUS TYPE PREFORMED EXPANSION JOINT FILLER, A.S.T.M. D-1751.
3. LARGE AGGREGATE, IN CONTRACTION JOINT, SHALL BE SEPARATED TO A DEPTH OF 1". FINISH DEPTH SHALL BE A MINIMUM OF 3/4".
4. EXPANSION JOINT 50' MAX. SPACING PER MAG SECT. 340 AND AT ALL P.C.'S, DRIVEWAYS, ALLEYS, AND STRUCTURES.
5. SUBGRADE TO BE COMPACTED TO 95% OF MAXIMUM PER MAG SECT. 301. MOISTURE TO BE 2% OVER OPTIMUM IN COHESIVE SOILS.
6. 4" MINIMUM OF ABC COMPACTED TO 95% PROCTOR SHALL EXTEND TO BACK OF SIDEWALK.

QUAD CITY STANDARD DETAIL	SIDEWALKS	REVISED: 07/16	DETAIL No. 230Q

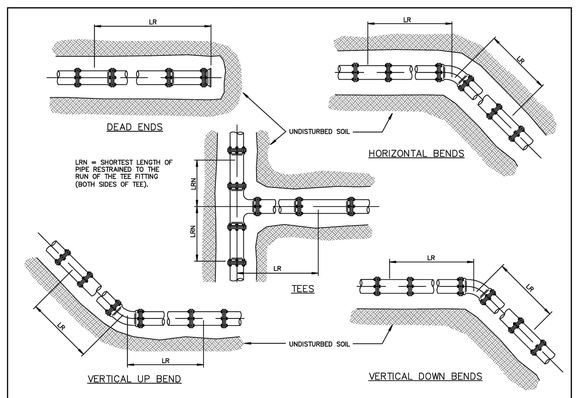

RESTRAINED LENGTHS, LR, FOR DUCTILE IRON PIPE													
NOMINAL PIPE SIZE INCHES	HORIZONTAL BENDS			TEES		VERTICAL OFFSETS							VALVES & DEAD ENDS
						90° BEND FITTINGS		45° BEND FITTINGS		22-1/2° BEND FITTINGS			
	90°	45°	22-1/2°	LRN=0'	LRN=10'	DOWN BEND	UP BEND	DOWN BEND	UP BEND	DOWN BEND	UP BEND		
4	18	7	4	30	8	31	18	13	7	6	3		31
6	25	10	5	43	20	44	25	18	10	9	5		44
8	32	13	6	56	34	58	32	24	13	11	6		58
10	38	16	8	68	45	69	38	29	16	14	8		69
12	45	19	9	80	57	81	45	34	19	16	9		81
14	51	21	10	91	68	92	51	38	21	18	10		92
16	57	24	11	103	79	104	57	43	24	21	11		104
18	62	26	12	113	90	115	62	48	26	23	12		115
20	68	28	14	125	100	126	68	52	28	25	14		126
24	79	33	16	145	121	147	79	61	33	29	16		147

RESTRAINED LENGTHS, LR, FOR DUCTILE IRON PIPE WITH POLYETHYLENE WRAP OR PVC													
NOMINAL PIPE SIZE INCHES	HORIZONTAL BENDS			TEES		VERTICAL OFFSETS							VALVES & DEAD ENDS
						90° BEND FITTINGS		45° BEND FITTINGS		22-1/2° BEND FITTINGS			
	90°	45°	22-1/2°	LRN=0'	LRN=10'	DOWN BEND	UP BEND	DOWN BEND	UP BEND	DOWN BEND	UP BEND		
4	26	11	5	69	18	72	26	30	11	14	5		72
6	36	15	7	99	47	102	36	42	15	20	7		102
8	47	19	9	130	78	133	47	55	19	26	9		133
10	56	23	11	157	103	159	56	66	23	32	11		159
12	65	27	13	185	131	187	65	77	27	37	13		187
14	74	31	15	211	156	214	74	89	31	42	15		214
16	82	34	16	238	183	241	82	100	34	48	16		241
18	90	37	18	263	207	266	90	110	38	53	18		266
20	98	41	20	289	233	292	98	121	41	58	20		292
24	113	47	22	337	280	340	113	141	47	68	22		340

NOTES:

1. ALL JOINTS WITHIN THE SPECIFIED LENGTH LR MUST BE RESTRAINED. ALL LENGTHS ARE GIVEN IN FEET.
2. THE MAXIMUM TEST PRESSURE SHALL NOT EXCEED 200 PSI
3. THE MINIMUM DEPTH OF BURY SHALL BE 4' TO TOP OF PIPE.

QUAD CITY STANDARD DETAIL	JOINT RESTRAINT FOR DUCTILE IRON AND POLYETHYLENE WRAPPED DUCTILE IRON WATER PIPES	REVISED: 07/16	DETAIL No. 303Q-1

QUAD CITY STANDARD DETAIL	JOINT RESTRAINT FOR DUCTILE IRON AND POLYETHYLENE WRAPPED DUCTILE IRON WATER PIPES	REVISED: 07/16	DETAIL No. 303Q-2

REVISIONS	BY
1 COP ROUND 1 COMMENTS	BH
2 COP ROUND 2 COMMENTS	BH

These drawings are the property of W. Alan Kenson & Associates P.C., and may not be reproduced in any way without the written consent of W. Alan Kenson & Associates, P.C.

Registered Professional Engineer (Civil) CERTIFICATE NO. 45636 BEN B. HUZA Date Signed 12/04/24 ARIZONA, U.S.A. Expires 12/31/24

W. Alan Kenson & Associates, P.C.
P 928-443-5812
F 928-443-5815
P.O. Box 11593
Prescott, AZ 86304
email: waka@cableone.net
www.kenson-associates.com
ARCHITECTURE & PLANNING

DRAWING: CIVIL IMPROVEMENT PLANS
STANDARD DETAILS

PROJECT: JSC Contracting Building B
6601 Inter Cal Way
Prescott, AZ 86301

APN: 103-50-054D
CNPLANS B2407-176 6601 INTER CAL WAY PLANS

DRAWN BY	BH
CHECKED BY	TS/BH
DATE	December 4, 2024
JOB NO.	799
SHEET	C3

Dec 04, 2024 - 1:53pm FILE: Z:\Projects\2020\20113\DWG\CIVIL PLANS-P2\20113-03-STANDARD DETAILS-P2.dwg <<C3D_Imperial>>

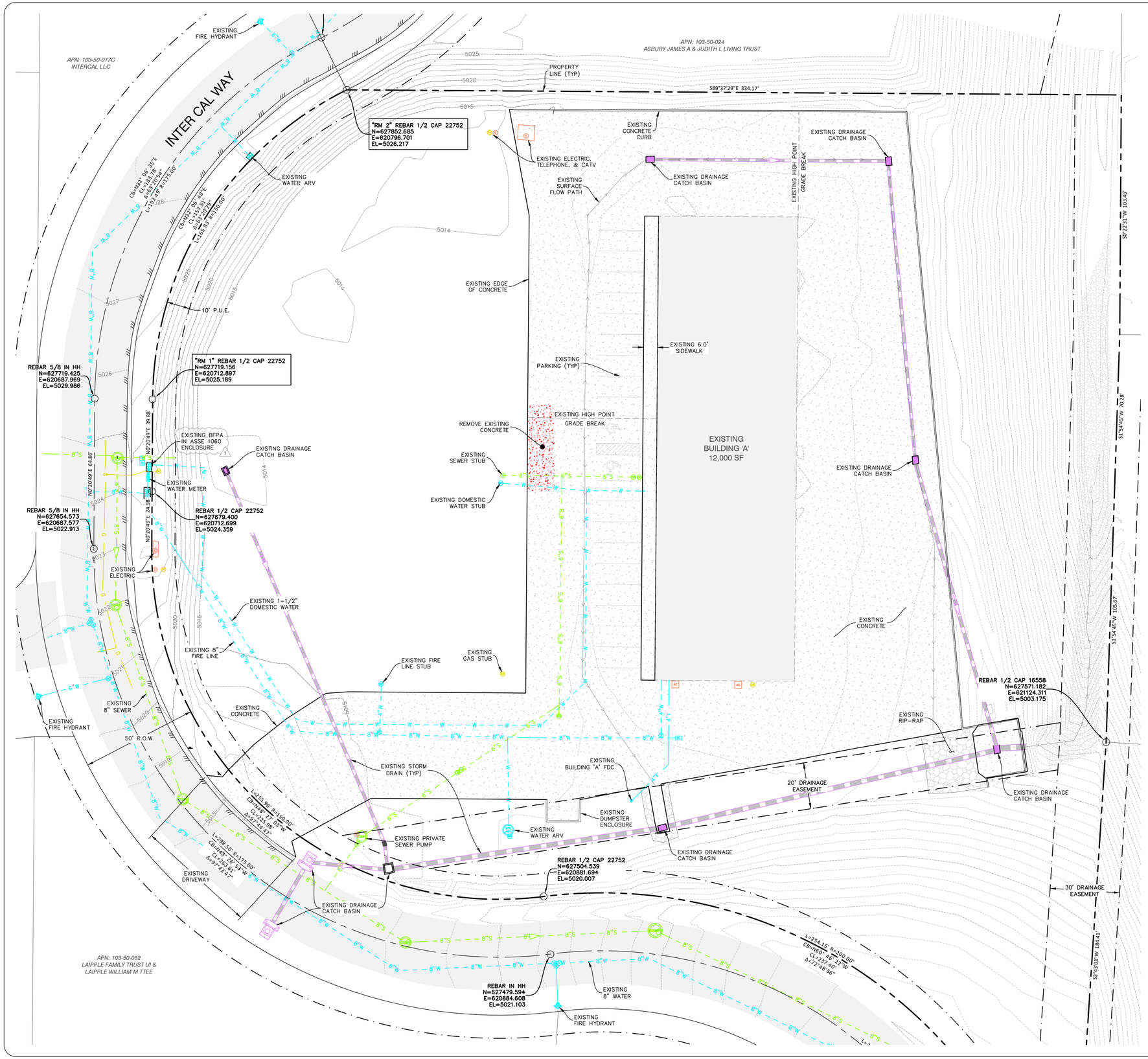

N

0 10' 20' 40'

SCALE: 1" = 20'

LEGEND

- SUBJECT PROPERTY LINE
- ADJACENT PROPERTY LINE
- EASEMENT
- RIGHT-OF-WAY
- 5015 — EXISTING INDEX CONTOUR
- EXISTING INTERMEDIATE CONTOUR
- EXISTING BUILDING
- EXISTING DRAINAGE FLOWLINE
- EXISTING BLOCK WALL
- EXISTING EDGE OF DIRT/GRAVEL ROAD
- EXISTING EDGE OF PAVEMENT
- EXISTING DRAINAGE PIPE
- CATV — EXISTING CABLE TV LINE
- EXISTING CABLE TV RISER
- E — EXISTING UNDERGROUND ELECTRIC LINE
- OHE — EXISTING OVERHEAD ELECTRIC LINE
- EXISTING ELECTRIC TRANSFORMER
- TL — EXISTING TELEPHONE/FIBER LINE
- EXISTING TELEPHONE RISER
- G — EXISTING NATURAL GAS MAIN
- EXISTING GAS METER
- S — EXISTING SEWER MAIN
- EXISTING SEWER MANHOLE
- W — EXISTING WATER MAIN
- EXISTING WATER METER BOX
- EXISTING FIRE HYDRANT
- EXISTING GATE VALVE
- EXISTING CONCRETE
- EXISTING ROCK RIP-RAP
- EXISTING ASPHALT PAVEMENT

PROJECT BASIS OF BEARING

THE BASIS OF BEARING FOR THIS PROJECT IS N32°06'48"E A DISTANCE OF 157.51 FEET ALONG THE CHORD FOR THE NORTHWESTERLY RIGHT OF WAY CURVE FOR THE FORMER LOT 68 BETWEEN TWO 1/2" REBARS WITH CAP RLS 22752

REFERENCE MARK	NORTHING	EASTING	ELEVATION (88)
RM 1	627719.156	620712.897	5025.189
RM 2	627852.685	620796.701	5026.217

THE COORDINATES AS DEPICTED HEREON REFLECT THE CITY OF PRESCOTT COORDINATE SYSTEM AS PUBLISHED BY THE CITY OF PRESCOTT AND AVAILABLE ON THEIR WEBSITE.

GENERAL NOTES:

1. THIS MAP DOES NOT REPRESENT THE RESULTS OF A BOUNDARY SURVEY. NO BOUNDARY SURVEY WAS PERFORMED OR IS IMPLIED BY THIS MAP.
2. ALL EASEMENTS OF RECORD MAY NOT BE PLOTTED HEREON.
3. TOPOGRAPHIC SURVEY PROVIDED BY GRANITE BASIN ENGINEERING, INC. (GBE) IN JUNE 2024.
4. SITE AND BUILDING PLAN DEVELOPED BY W. ALAN KENSON & ASSOCIATES, P.C. (WAKA).
5. COOPERATION WITH UTILITIES SHALL BE DONE IN ACCORDANCE WITH SECTION 105.6 OF MAG SPECIFICATIONS.
6. DRY UTILITY PROVIDERS MUST BE CONSULTED WITH FOR RELOCATION OF EXISTING UTILITIES IN CONFLICT WITH PROPOSED IMPROVEMENTS.
7. EXISTING UTILITY INFORMATION IS APPROXIMATE AND FOR INFORMATION PURPOSES ONLY. HORIZONTAL LOCATIONS ARE BASED ON FIELD SURVEY & AS-BUILT DATA. THE CONTRACTOR SHALL VERIFY ALL EXISTING UTILITY LOCATIONS & ELEVATIONS PRIOR TO CONSTRUCTION.
8. REMOVALS SHALL BE DONE IN ACCORDANCE WITH MAG SPECIFICATIONS SECTION 350.

REVISIONS	BY
1 COP ROUND 1 COMMENTS	BH
2 COP ROUND 2 COMMENTS	BH

These drawings are the property of W. Alan Kenson & Associates P.C., and may not be reproduced in any way without the written consent of W. Alan Kenson & Associates, P.C.

Registered Professional Engineer (Civil) CERTIFICATE NO. 45636 BEN B. HUZA Date Signed 12/04/24 ARIZONA, U.S.A. Expires 12/31/24

W. Alan Kenson & Associates, P.C.
P 928-443-5812
F 928-443-5815
P.O. Box 11593
Prescott, AZ 86304
email: waka@cableone.net
www.kenson-associates.com
ARCHITECTURE & PLANNING

DRAWING: CIVIL IMPROVEMENT PLANS
EXISTING SITE SURVEY MAP

PROJECT: JSC Contracting Building B
6601 Inter Cal Way
Prescott, AZ 86301

APN: 103-50-054D
CNPLANS B2407-176 6601 INTER CAL WAY PLANS

DRAWN BY	BH
CHECKED BY	TS/BH
DATE	December 4, 2024
JOB NO.	799
SHEET	C4

FILE: Z:\Projects\2020\20113\DWG\CIVIL PLANS-P2\2013-04-EXISTING SITE SURVEY-P2.dwg <<C3D_Imperial>>

Dec 04, 2024 - 1:55pm

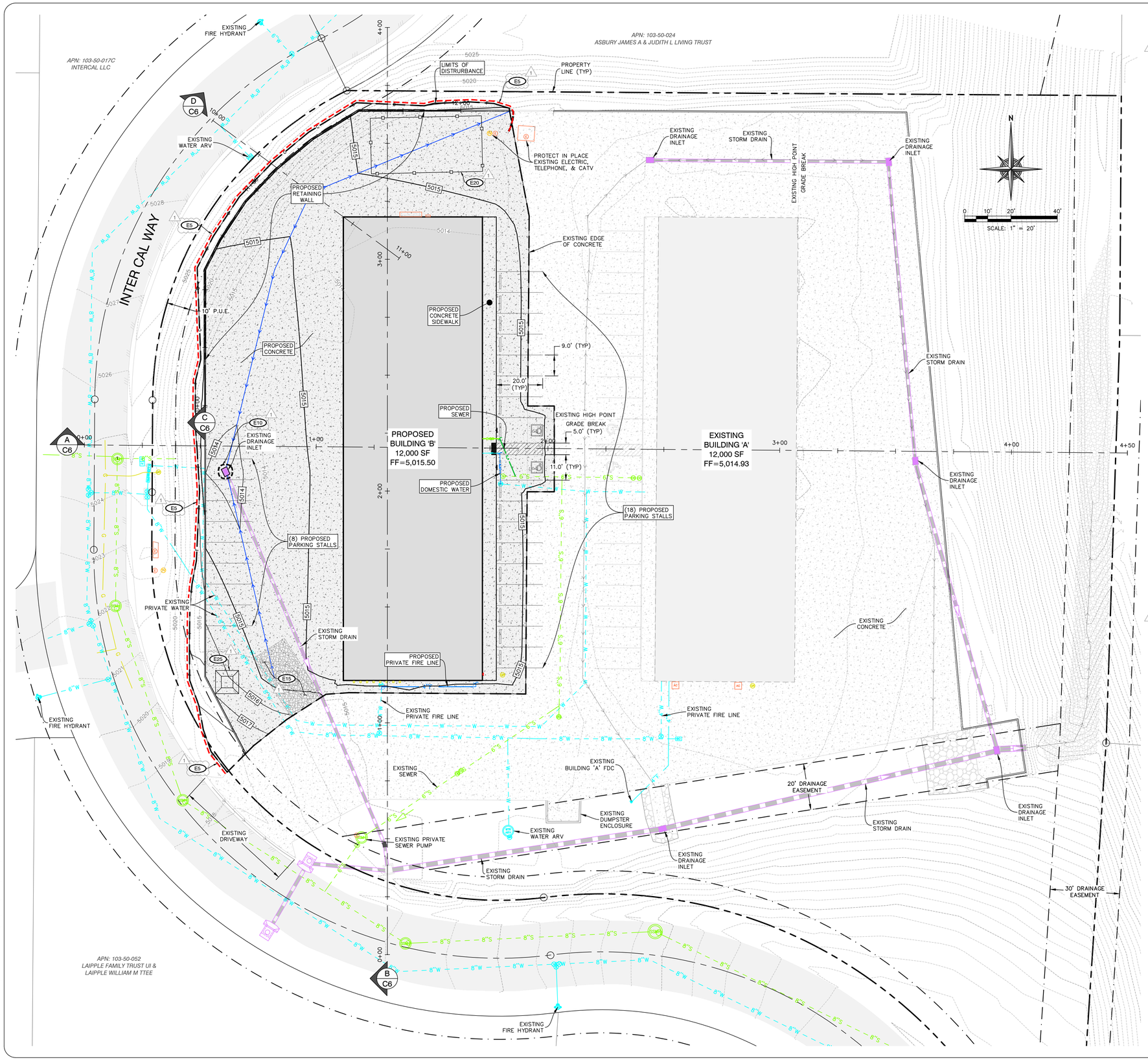

PROJECT QUANTITIES

EROSION CONTROL QUANTITIES

KEY	DESCRIPTION	QTY	UNIT
E5	INSTALL SEDIMENT WADDLE PER EPCM SC-5	400	LF
E10	APPLY STORM DRAIN INLET PROTECTION PER EPCM SC-8	1	EA
E15	INSTALL STABILIZED CONSTRUCTION ACCESS PER EPCM SC-10	1	EA
E20	MATERIAL DELIVERY & STORAGE AREA PER EPCM GH-5	1	LS
E25	APPLY CONCRETE WASTE MANAGEMENT PER EPCM WM-4	1	EA

SEWER QUANTITIES

KEY	DESCRIPTION	QTY	UNIT
S5	CONNECT TO EXISTING SEWER STUB	1	EA
S10	INSTALL 4" Ø DOUBLE CLEANOUT & BACKWATER VALVE PER PLUMBING PLANS	1	LS
S15	INSTALL 4" Ø SDR 35 PVC SEWER LATERAL WITH TRENCHING, BEDDING, & BACKFILL PER QCSD 200Q-1	18	LF

WATER QUANTITIES

KEY	DESCRIPTION	QTY	UNIT
W5	CONNECT TO EXISTING WATER STUB	2	EA
W10	INSTALL 4" Ø C-600/CL350 DIP FIRE LINE WITH TRENCHING, BEDDING, & BACKFILL PER QCSD 200Q-1	44	LF
W15	INSTALL 1-1/2" Ø SCH-80 PVC DOMESTIC YARD LINE TO BUILDING WITH TRENCHING, BEDDING, & BACKFILL PER QCSD 200Q-1	14	LF
W20	INSTALL WATER FITING WITH JOINT RESTRAINT PER QCSDS 303Q-1 & 2	2	EA

PAVING QUANTITIES

KEY	DESCRIPTION	QTY	UNIT
P5	SAWCUT, REMOVE & REPLACE EXISTING CONCRETE PER QCSD 200Q-1	430	SF
P10	INSTALL 5" OF PCC WITH #4 REBAR @ 24" O.C. BOTH WAYS OVER 4" OF ABC OVER 8" OF PREPARED SUBGRADE	2,305	SY
P15	INSTALL BOLLARD - TYPE 1 PERMANENT PER QCSD 140Q	19	EA
P20	INSTALL PRECAST SAFETY CURB PER MAG SD 150	18	LF
P25	INSTALL SINGLE CURB - TYPE 'A' PER QCSD 222Q	212	LF
P30	INSTALL CURB TERMINATION PER QCSD 222Q	1	EA
P35	INSTALL SIDEWALK (WIDTHS PER PLAN) PER QCSD 230Q	1,200	SF
P40	INSTALL PARKING LOT (SINGLE & GORE) STRIPING PER PLAN & COP REQUIREMENTS	1	LS
P45	INSTALL ADA COMPLIANT HANDICAP STRIPING & SIGNAGE PER PLAN & COP REQUIREMENTS	2	EA
P50	INSTALL DETECTABLE WARNING (TRUNCATED DOMES) PER QCSD 233Q-1	1	EA
P55	INSTALL 2' MAX CONCRETE RETAINING WALL PER DETAIL 103 (SEE SHEET C8)	11	LF
P60	INSTALL 5' MAX CONCRETE RETAINING WALL PER DETAIL 101 (SEE SHEET C8)	32	LF
P65	INSTALL 9' MAX CONCRETE RETAINING WALL PER DETAIL 102 (SEE SHEET C8)	121	LF
P70	INSTALL SAFETY RAIL (TYPE 1) PER QCSD 145Q	164	LF

ALL QUANTITIES SHOWN ON THE PLANS ARE APPROXIMATE AND ARE FURNISHED SOLELY FOR THE CONTRACTOR'S CONVENIENCE. CONTRACTOR SHALL VERIFY ALL QUANTITIES.

EROSION CONTROL NOTES:

1. TOTAL AREA OF DISTURBANCE ≈ 0.86 ACRES WHICH DOES NOT WARRANT COVERAGE UNDER ADEQ'S CONSTRUCTION GENERAL PERMIT.
2. THE CONTRACTOR IS RESPONSIBLE FOR FILING THE NOTICE OF INTENT (NOI) FOR CONSTRUCTION ACTIVITY DISCHARGES WITH ADEQ PRIOR TO ANY CONSTRUCTION ACTIVITIES (FOR DISTURBANCES 1 ACRE OR GREATER).
3. PERMANENT STABILIZATION TO BE SUPPLEMENTED BY LANDSCAPE PLAN AND RIPRAP.
4. ADEQ AUTHORIZATION NOTICE SHALL BE POSTED ON-SITE NEAR CONSTRUCTION ENTRANCE.
5. REFER TO ADOT'S EROSION AND POLLUTION CONTROL MANUAL (EPCM) FOR BMP INSTALLATION INSTRUCTIONS.
6. APPLY CONSTRUCTION SITE PLANNING & MANAGEMENT PER EPCM CP-1 & CP-2.
7. KEEP SITE CLEAN OF DUST AND DEBRIS. LIMIT DUST TO LOWEST PRACTICABLE LEVEL BY SPRINKLING WITH WATER.
8. ALL DISTURBED AREAS SHALL BE HYDRO-SEEDED PER ADOT EPCM BMP EC-4 WITH SEED MIX PER CITY OF PRESCOTT SPECIFICATIONS.
9. ALL STOCKPILED MATERIAL STORED FOR THIS PROJECT FOR MORE THAN SEVEN (7) DAYS SHALL BE SURROUNDED BY SEDIMENT WADDLES PER ADOT EPCM BMP GH-7.
10. VEHICLE FUELING & MAINTENANCE SHALL BE DONE IN ACCORDANCE WITH ADOT EPCM BMPS GH-2 & GH-3.
11. TRASH RECEPTICLE, PORTABLE TOILET, & SPILL RESPONSE KIT SHALL BE LOCATED WITHIN THE DESIGNATED EQUIPMENT/MATERIAL STORAGE AREA.
12. POLLUTANT GENERATING WASH DOWN, FUELING, AND MAINTENANCE ACTIVITIES SHALL BE CONDUCTED WITHIN THE DESIGNATED EQUIPMENT/MATERIAL STORAGE AREA(S).
13. VEHICLES SHALL ONLY ENTER AND EXIT THROUGH THE STABILIZED CONSTRUCTION ENTRANCE(S) SHOWN ON THE EROSION CONTROL PLAN.
14. THIS SITE HAS NO SURFACE WATER BODIES.
15. IN THE EVENT OF A SPILL, THE SWPPP OPERATOR SHALL IMMEDIATELY CONTACT THE FIRE DEPARTMENT, AND THE CITY OF PRESCOTT, AND WITHIN 24 HOURS ADEQ AT (602-771-2330).

GENERAL NOTES:

1. THIS MAP DOES NOT REPRESENT THE RESULTS OF A BOUNDARY SURVEY. NO BOUNDARY SURVEY WAS PERFORMED OR IS IMPLIED BY THIS MAP.
2. ALL EASEMENTS OF RECORD MAY NOT BE PLOTTED HEREON.
3. TOPOGRAPHIC SURVEY PROVIDED BY GRANITE BASIN ENGINEERING, INC. (GBE) IN JUNE 2024.
4. SITE AND BUILDING PLAN DEVELOPED BY W. ALAN KENSON & ASSOCIATES, P.C. (WAKA).
5. COOPERATION WITH UTILITIES SHALL BE DONE IN ACCORDANCE WITH SECTION 105.6 OF MAG SPECIFICATIONS.
6. DRY UTILITY PROVIDERS MUST BE CONSULTED WITH FOR RELOCATION OF EXISTING UTILITIES IN CONFLICT WITH PROPOSED IMPROVEMENTS.
7. EXISTING UTILITY INFORMATION IS APPROXIMATE AND FOR INFORMATION PURPOSES ONLY. HORIZONTAL LOCATIONS ARE BASED ON FIELD SURVEY & AS-BUILT DATA. THE CONTRACTOR SHALL VERIFY ALL EXISTING UTILITY LOCATIONS & ELEVATIONS PRIOR TO CONSTRUCTION.
8. REMOVALS SHALL BE DONE IN ACCORDANCE WITH MAG SPECIFICATIONS SECTION 350.

REVISIONS	BY
1 COP ROUND 1 COMMENTS	BH
2 COP ROUND 2 COMMENTS	BH

These drawings are the property of W. Alan Kenson & Associates P.C., and may not be reproduced in any way without the written consent of W. Alan Kenson & Associates, P.C.

Registered Professional Engineer (Civil) CERTIFICATE NO. 45636 BEN B. HUZA Date Signed 12/04/24 ARIZONA, U.S.A. Expires 12/31/24

W. Alan Kenson & Associates, P.C.
P 928-443-5812
F 928-443-5815
P.O. Box 11593
Prescott, AZ 86304
email: waka@cableone.net
www.kenson-associates.com
ARCHITECTURE & PLANNING

DRAWING: CIVIL IMPROVEMENT PLANS
PROJECT SUMMARY MAP

PROJECT: JSC Contracting Building B
6601 Inter Cal Way
Prescott, AZ 86301

APN: 103-50-054D
CNPLANS B2407-176 6601 INTER CAL WAY PLANS

DRAWN BY	BH
CHECKED BY	TS/BH
DATE	December 4, 2024
JOB NO.	799
SHEET	C5

FILE: Z:\Projects\2020\20113\DWG\CIVIL PLANS-P2\20113-05-PROJECT SUMMARY-P2.dwg <<C-3D_Imperial>>

Dec 04, 2024 - 1:56pm

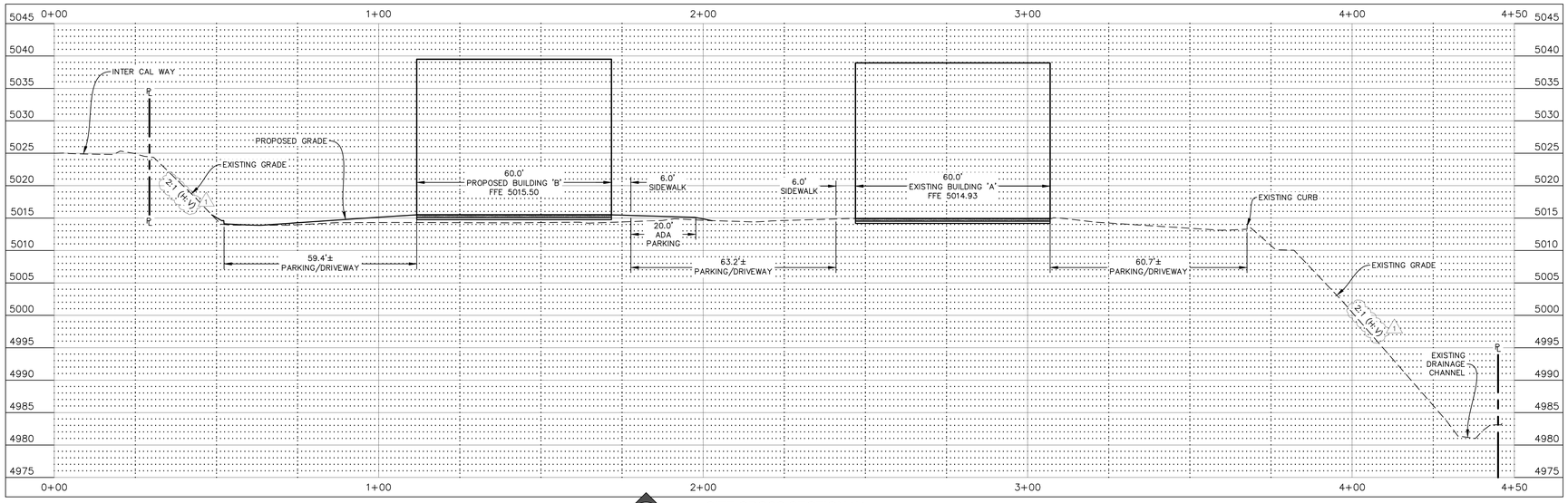

A
C5

SITE CROSS SECTION 'A'

SCALE: 1" = 20' HORIZ.
1" = 10' VERT.

PAVING KEYNOTES	
KEY	DESCRIPTION
P5	SAWCUT, REMOVE & REPLACE EXISTING CONCRETE PER QCSD 200Q-1
P10	INSTALL 5" OF PCC WITH #4 REBAR @ 24" O.C. BOTH WAYS OVER 4" OF ABC OVER 8" OF PREPARED SUBGRADE
P15	INSTALL BOLLARD - TYPE 1 PERMANENT PER QCSD 140Q
P20	INSTALL PRECAST SAFETY CURB PER MAG SD 150
P25	INSTALL SINGLE CURB - TYPE 'A' PER QCSD 222Q
P30	INSTALL CURB TERMINATION PER QCSD 222Q
P35	INSTALL SIDEWALK (WIDTHS PER PLAN) PER QCSD 230Q
P40	INSTALL PARKING LOT (SINGLE & GORE) STRIPING PER PLAN & COP REQUIREMENTS
P45	INSTALL ADA COMPLIANT HANDICAP STRIPING & SIGNAGE PER PLAN & COP REQUIREMENTS
P50	INSTALL DETECTABLE WARNING (TRUNCATED DOMES) PER QCSD 233Q-1
P55	INSTALL 2' MAX CONCRETE RETAINING WALL PER DETAIL 103 (SEE SHEET C8)
P60	INSTALL 5' MAX CONCRETE RETAINING WALL PER DETAIL 101 (SEE SHEET C8)
P65	INSTALL 9' MAX CONCRETE RETAINING WALL PER DETAIL 102 (SEE SHEET C8)
P70	INSTALL SAFETY RAIL (TYPE 1) PER QCSD 145Q

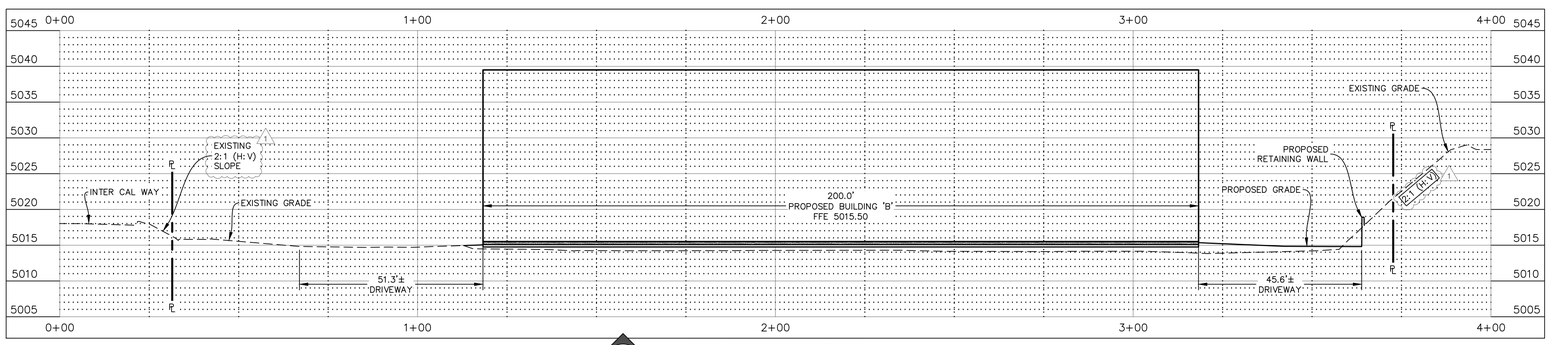

B
C5

SITE CROSS SECTION 'B'

SCALE: 1" = 20' HORIZ.
1" = 10' VERT.

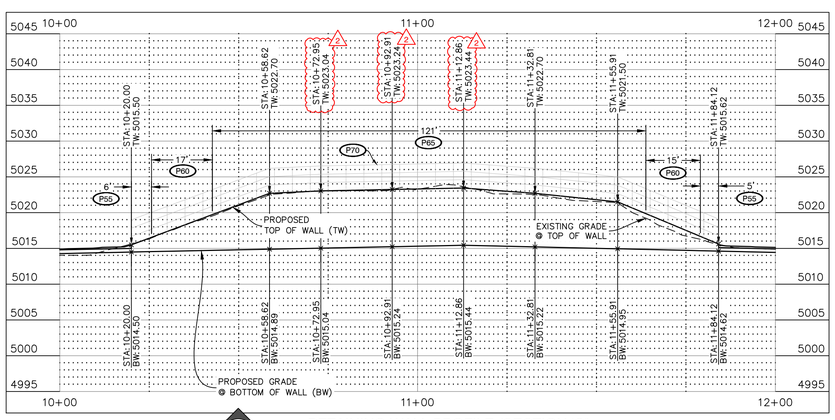

C
C5

RETAINING WALL PROFILE (SECTION 'C')

SCALE: 1" = 20' HORIZ.
1" = 10' VERT.

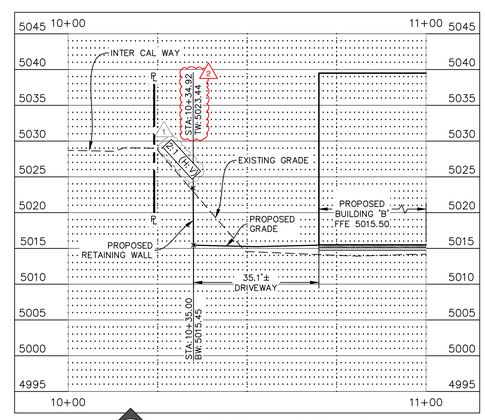

D
C5

SITE CROSS SECTION 'D'

SCALE: 1" = 20' HORIZ.
1" = 10' VERT.

GENERAL NOTES:

1. THIS MAP DOES NOT REPRESENT THE RESULTS OF A BOUNDARY SURVEY. NO BOUNDARY SURVEY WAS PERFORMED OR IS IMPLIED BY THIS MAP.
2. ALL EASEMENTS OF RECORD MAY NOT BE PLOTTED HEREON.
3. TOPOGRAPHIC SURVEY PROVIDED BY GRANITE BASIN ENGINEERING, INC. (GBE) IN JUNE 2024.
4. SITE AND BUILDING PLAN DEVELOPED BY W. ALAN KENSON & ASSOCIATES, P.C. (WAKA).
5. COOPERATION WITH UTILITIES SHALL BE DONE IN ACCORDANCE WITH SECTION 105.6 OF MAG SPECIFICATIONS.
6. DRY UTILITY PROVIDERS MUST BE CONSULTED WITH FOR RELOCATION OF EXISTING UTILITIES IN CONFLICT WITH PROPOSED IMPROVEMENTS.
7. EXISTING UTILITY INFORMATION IS APPROXIMATE AND FOR INFORMATION PURPOSES ONLY. HORIZONTAL LOCATIONS ARE BASED ON FIELD SURVEY & AS-BUILT DATA. THE CONTRACTOR SHALL VERIFY ALL EXISTING UTILITY LOCATIONS & ELEVATIONS PRIOR TO CONSTRUCTION.
8. REMOVALS SHALL BE DONE IN ACCORDANCE WITH MAG SPECIFICATIONS SECTION 350.

REVISIONS	BY
1 COP ROUND 1 COMMENTS	BH
2 COP ROUND 2 COMMENTS	BH

These drawings are the property of W. Alan Kenson & Associates P.C., and may not be reproduced in any way without the written consent of W. Alan Kenson & Associates, P.C.

Registered Professional Engineer (Civil) CERTIFICATE NO. 45636 BEN B. HUZA Date Signed 12/04/24 ARIZONA, U.S.A. Expires 12/31/24

W. Alan Kenson & Associates, P.C.
P 928-443-5812
F 928-443-5815
P.O. Box 11593
Prescott, AZ 86304
email: waka@cableone.net
www.kenson-associates.com
ARCHITECTURE & PLANNING

DRAWING: CIVIL IMPROVEMENT PLANS
SITE CROSS SECTIONS

PROJECT: JSC Contracting Building B
6601 Inter Cal Way
Prescott, AZ 86301

APN: 103-50-054D

CNPLANS B2407-176 6601 INTER CAL WAY PLANS

DRAWN BY	BH
CHECKED BY	TS/BH
DATE	December 4, 2024
JOB NO.	799
SHEET	C6

Dec 04, 2024 - 2:01pm FILE: Z:\Projects\2020\20113\DWG\CIVIL PLANS-P2\20113-06-SITE CROSS SECTIONS-P2.dwg <<C3D_Imperial>>

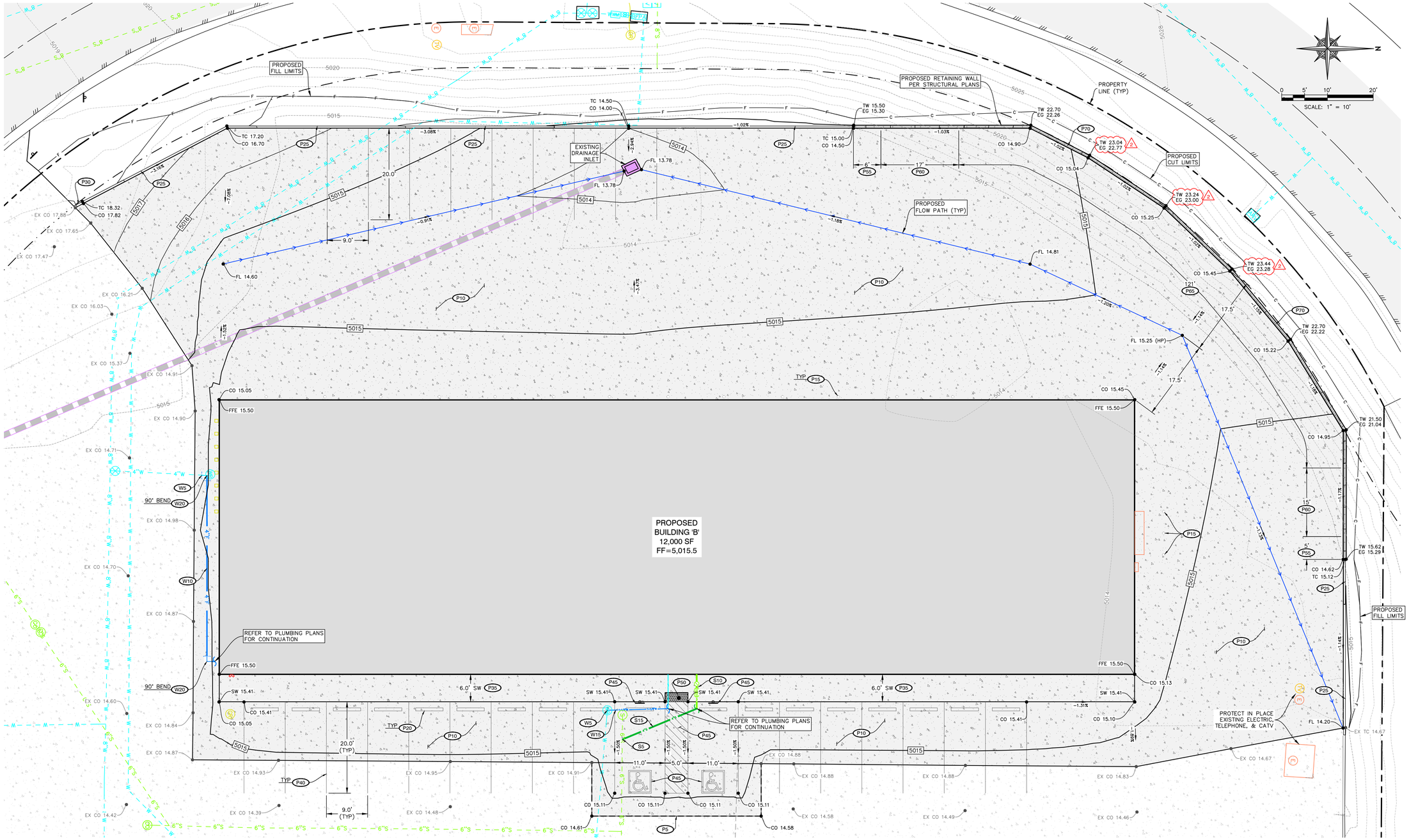

SEWER KEYNOTES	
KEY	DESCRIPTION
S5	CONNECT TO EXISTING SEWER STUB
S10	INSTALL 4" Ø DOUBLE CLEANOUT & BACKWATER VALVE PER PLUMBING PLANS
S15	INSTALL 4" Ø SDR 35 PVC SEWER LATERAL WITH TRENCHING, BEDDING, & BACKFILL PER QCSD 200Q-1
WATER KEYNOTES	
KEY	DESCRIPTION
W5	CONNECT TO EXISTING WATER STUB
W10	INSTALL 4" Ø C-600/CL350 DIP FIRE LINE WITH TRENCHING, BEDDING, & BACKFILL PER QCSD 200Q-1
W15	INSTALL 1-1/2" Ø SCH-80 PVC DOMESTIC YARD LINE TO BUILDING WITH TRENCHING, BEDDING, & BACKFILL PER QCSD 200Q-1
W20	INSTALL WATER FITING WITH JOINT RESTRAINT PER QCSDS 303Q-1 & 2

PAVING KEYNOTES	
KEY	DESCRIPTION
P5	SAWCUT, REMOVE & REPLACE EXISTING CONCRETE PER QCSD 200Q-1
P10	INSTALL 5" OF PCC WITH #4 REBAR @ 24" O.C. BOTH WAYS OVER 4" OF ABC OVER 8" OF PREPARED SUBGRADE
P15	INSTALL BOLLARD - TYPE 1 PERMANENT PER QCSD 140Q
P20	INSTALL PRECAST SAFETY CURB PER MAG SD 150
P25	INSTALL SINGLE CURB - TYPE 'A' PER QCSD 222Q
P30	INSTALL CURB TERMINATION PER QCSD 222Q
P35	INSTALL SIDEWALK (WIDTHS PER PLAN) PER QCSD 230Q
P40	INSTALL PARKING LOT (SINGLE & GORE) STRIPING PER PLAN & COP REQUIREMENTS
P45	INSTALL ADA COMPLIANT HANDICAP STRIPING & SIGNAGE PER PLAN & COP REQUIREMENTS

PAVING KEYNOTES	
KEY	DESCRIPTION
P50	INSTALL DETECTABLE WARNING (TRUNCATED DOMES) PER QCSD 233Q-1
P55	INSTALL 2' MAX CONCRETE RETAINING WALL PER DETAIL 103 (SEE SHEET C8)
P60	INSTALL 5' MAX CONCRETE RETAINING WALL PER DETAIL 101 (SEE SHEET C8)
P65	INSTALL 9' MAX CONCRETE RETAINING WALL PER DETAIL 102 (SEE SHEET C8)
P70	INSTALL SAFETY RAIL (TYPE 1) PER QCSD 145Q

DRAINAGE NOTE

REFER TO PHASE 1 DRAINAGE REPORT FOR SITE DRAINAGE INFORMATION.

GENERAL NOTES:

1. THIS MAP DOES NOT REPRESENT THE RESULTS OF A BOUNDARY SURVEY. NO BOUNDARY SURVEY WAS PERFORMED OR IS IMPLIED BY THIS MAP.
2. ALL EASEMENTS OF RECORD MAY NOT BE PLOTTED HEREON.
3. TOPOGRAPHIC SURVEY PROVIDED BY GRANITE BASIN ENGINEERING, INC. (GBE) IN JUNE 2024.
4. SITE AND BUILDING PLAN DEVELOPED BY W. ALAN KENSON & ASSOCIATES, P.C. (WAKA).
5. COOPERATION WITH UTILITIES SHALL BE DONE IN ACCORDANCE WITH SECTION 105.6 OF MAG SPECIFICATIONS.
6. DRY UTILITY PROVIDERS MUST BE CONSULTED WITH FOR RELOCATION OF EXISTING UTILITIES IN CONFLICT WITH PROPOSED IMPROVEMENTS.
7. EXISTING UTILITY INFORMATION IS APPROXIMATE AND FOR INFORMATION PURPOSES ONLY. HORIZONTAL LOCATIONS ARE BASED ON FIELD SURVEY & AS-BUILT DATA. THE CONTRACTOR SHALL VERIFY ALL EXISTING UTILITY LOCATIONS & ELEVATIONS PRIOR TO CONSTRUCTION.
8. REMOVALS SHALL BE DONE IN ACCORDANCE WITH MAG SPECIFICATIONS SECTION 350.

REVISIONS	BY
1 COP ROUND 1 COMMENTS	BH
2 COP ROUND 2 COMMENTS	BH

These drawings are the property of W. Alan Kenson & Associates P.C., and may not be reproduced in any way without the written consent of W. Alan Kenson & Associates, P.C.

Registered Professional Engineer (Civil) CERTIFICATE NO. 45636 BEN B. HUZA Date Signed 12/04/24 ARIZONA, U.S.A. Expires 12/31/25

W. Alan Kenson & Associates, P.C.
P 928-443-5812
F 928-443-5815
P.O. Box 11593
Prescott, AZ 86304
email: waka@cableone.net
www.kenson-associates.com
ARCHITECTURE & PLANNING

DRAWING: CIVIL IMPROVEMENT PLANS
GRADING, DRAINAGE & UTILITY PLAN

PROJECT: JSC Contracting Building B
6601 Inter Cal Way
Prescott, AZ 86301

APN: 103-50-054D
CNPLANS_B2407-176 6601 INTER CAL WAY PLANS

DRAWN BY	BH
CHECKED BY	TS/BH
DATE	December 4, 2024
JOB NO.	799
SHEET	C7

FILE: Z:\Projects\2020\20113\DWG\CIVIL PLANS-P2\20113-07-GDU PLAN-P2.dwg <<C3D_Imperial>>
Dec 04, 2024 - 2:03pm

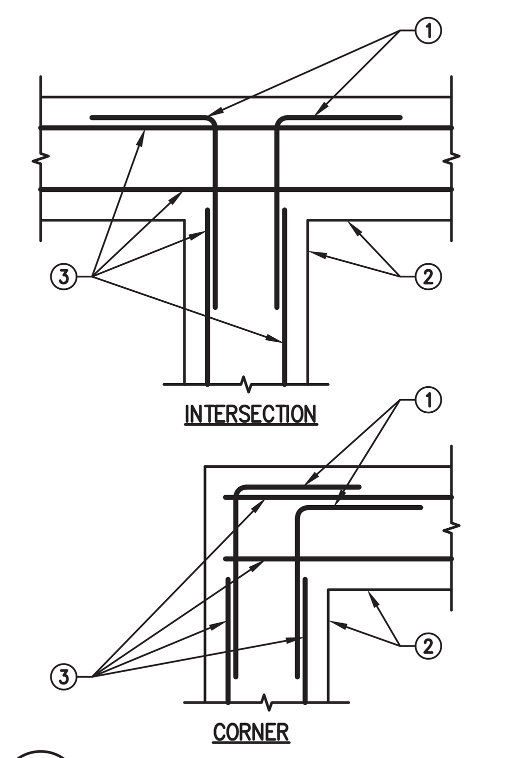

KEY NOTES:

1. CORNER BARS SAME SIZE AND SPACING AS HORIZONTAL REINFORCING. LAP PER G.S.N. (24" MINIMUM).
2. CONCRETE STEM WALL OR FOOTING.
3. REINFORCING PER PLANS AND/OR DETAILS.

01 PLAN – CORNER REINFORCING IN CONCRETE FOOTING, STEM OR WALL
110–01.1 NOT TO SCALE

	CLASS B TENSION SPLICE LENGTHS (INCHES)						COMP. BARS	
CONC PSI	f'c = ≥ 2,500/3,000		f'c = ≥ 4,000		f'c = ≥ 5,000		f'c = ≥ 3,000	
BAR LOCATION / SIZE (METRIC)	REGULAR	TOP	REGULAR	TOP	REGULAR	TOP	STD LAP	ENCLOSED WITH SPIRAL TIES
#3 (10)	24"	31"	19"	24"	17"	22"	12"	12"
#4 (13)	32"	41"	25"	32"	22"	29"	15"	12"
#5 (16)	39"	51"	31"	40"	28"	36"	19"	14"
#6 (19)	47"	61"	37"	48"	33"	43"	23"	17"
#7 (22)	69"	89"	54"	70"	49"	63"	26"	20"
#8 (25)	78"	102"	62"	80"	55"	72"	30"	23"
#9 (29)	88"	115"	70"	91"	63"	81"	34"	25"
#10 (32)	99"	129"	79"	102"	70"	91"	38"	28"
#11 (36)	110"	143"	87"	113"	78"	101"	42"	31"

KEY NOTES:

1. TOP BARS ARE ANY HORIZONTAL BARS PLACED SO THAT MORE THAN 12" OF FRESH CONCRETE IS CAST IN THE MEMBER BELOW THE REINFORCEMENT.
2. LAP SPLICES SHALL BE CLASS "B" TENSION LAP SPLICES PER LATEST EDITION OF ACI 318 UNLESS SPECIFICALLY NOTED OTHERWISE ON THE DRAWINGS OR SCHEDULES.
3. CONTACT STRUCTURAL ENGINEER IF CLEAR SPACING OF REINFORCEMENT IS LESS THAN OR EQUAL TO 2 BAR DIAMETERS (≤), OR IF CLEAR COVER IS LESS THAN THE BAR DIAMETER (db).
4. THIS TABLE IS BASED ON NORMAL WEIGHT CONCRETE.
5. FOR ADDITIONAL INFORMATION, SEE G.S.N., PLANS, SCHEDULES AND DETAILS.

02 LAP SCHEDULE FOR REINFORCING STEEL
102–01 NOT TO SCALE

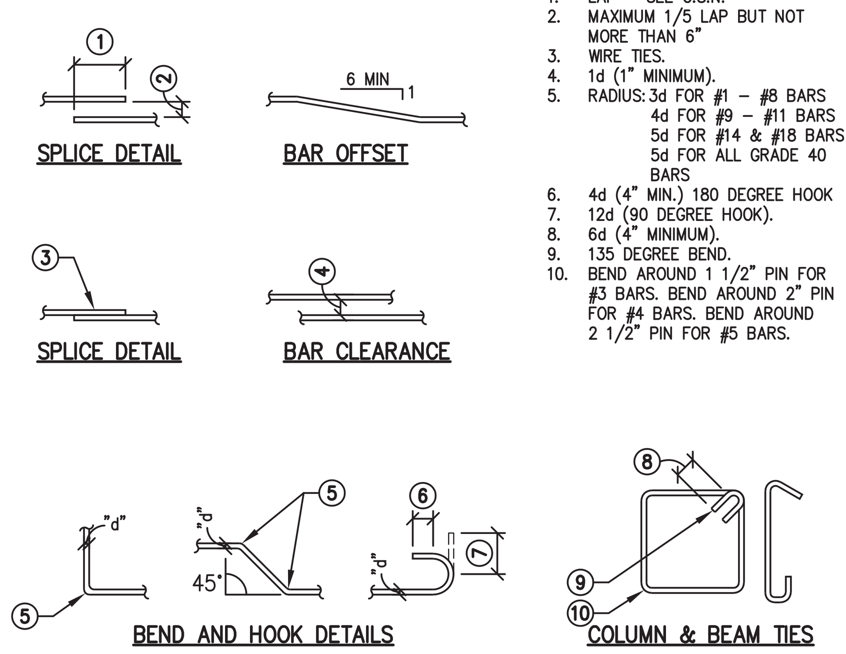

KEY NOTES:

1. LAP – SEE G.S.N.
2. MAXIMUM 1/5 LAP BUT NOT MORE THAN 6"
3. WIRE TIES.
4. 1d (1" MINIMUM).
5. RADIUS: 3d FOR #1 – #8 BARS
   4d FOR #9 – #11 BARS
   5d FOR #14 & #18 BARS
   5d FOR ALL GRADE 40 BARS
6. 4d (4" MIN.) 180 DEGREE HOOK
7. 12d (90 DEGREE HOOK).
8. 6d (4" MINIMUM).
9. 135 DEGREE BEND.
10. BEND AROUND 1 1/2" PIN FOR #3 BARS. BEND AROUND 2" PIN FOR #4 BARS. BEND AROUND 2 1/2" PIN FOR #5 BARS.

03 TYPICAL CONCRETE REINFORCING BAR DETAILS
102–02 NOT TO SCALE

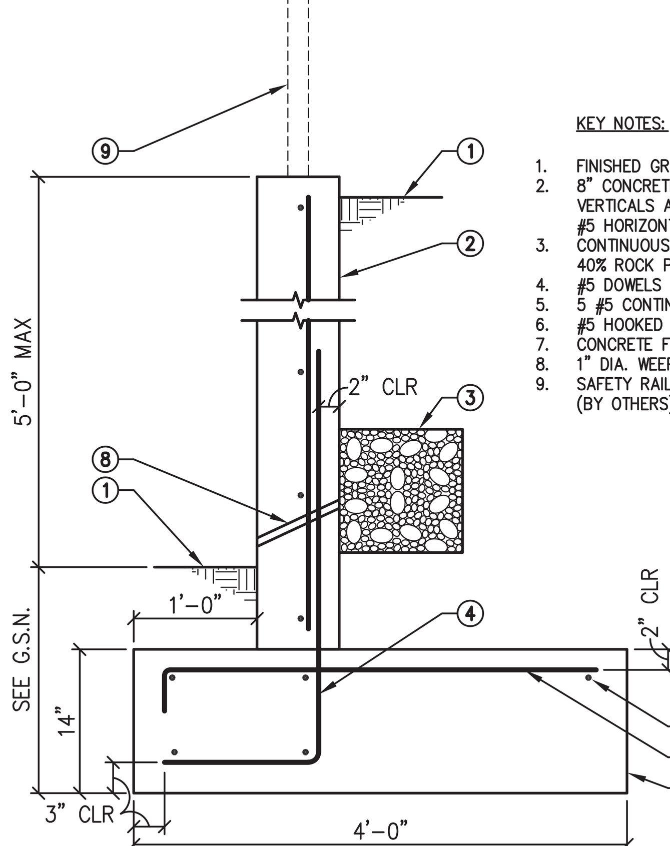

KEY NOTES:

1. FINISHED GRADE.
2. 8" CONCRETE WALL WITH #5 VERTICALS AT 12" O.C. AND #5 HORIZONTALS AT 16" O.C.
3. CONTINUOUS 12"x12" – 40% ROCK POCKET.
4. #5 DOWELS AT 12" O.C.
5. 5 #5 CONTINUOUS.
6. #5 HOOKED BARS AT 12" O.C.
7. CONCRETE FOOTING.
8. 1" DIA. WEEP HOLES AT 32" O.C.
9. SAFETY RAILING AS REQUIRED (BY OTHERS).

101 5'–0" RETAINING WALL
118–05M NOT TO SCALE

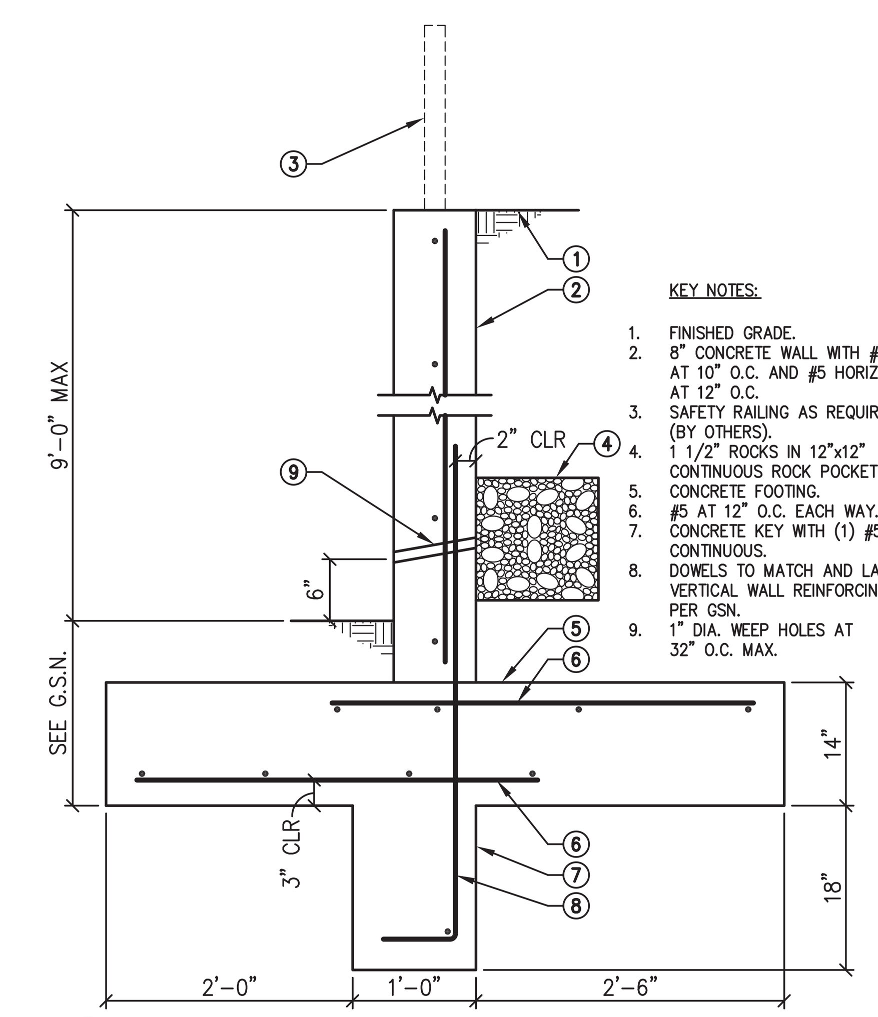

KEY NOTES:

1. FINISHED GRADE.
2. 8" CONCRETE WALL WITH #6 VERTICALS AT 10" O.C. AND #5 HORIZONTALS AT 12" O.C.
3. SAFETY RAILING AS REQUIRED (BY OTHERS).
4. 1 1/2" ROCKS IN 12"x12" CONTINUOUS ROCK POCKET.
5. CONCRETE FOOTING.
6. #5 AT 12" O.C. EACH WAY.
7. CONCRETE KEY WITH (1) #5 CONTINUOUS.
8. DOWELS TO MATCH AND LAP VERTICAL WALL REINFORCING PER GSN.
9. 1" DIA. WEEP HOLES AT 32" O.C. MAX.

102 9'–0" MASONRY RETAINING WALL
118–06M NOT TO SCALE

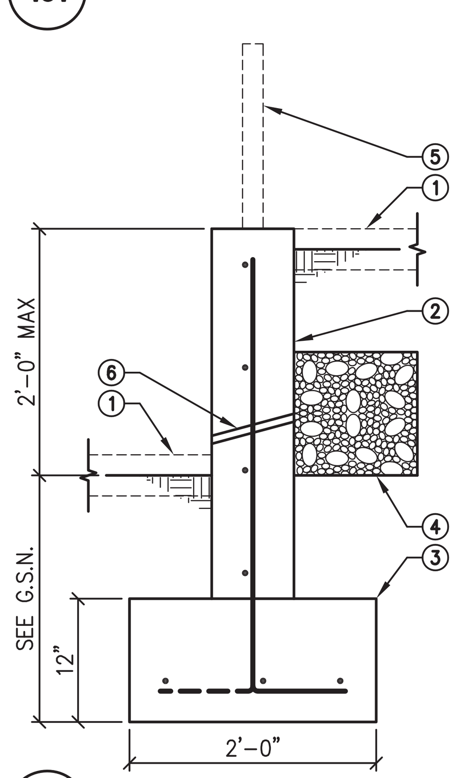

KEY NOTES:

1. FINISHED GRADE OR CONCRETE SLAB WHERE OCCURS.
2. 8" CONCRETE WALL WITH #4 HORIZONTALS AT 18" O.C. AND #5 VERTICALS AT 18" O.C. – ALTERNATE BENDS.
3. CONCRETE FOOTING WITH (3) #4 CONTINUOUS.
4. CONT. 12"x12"–40% ROCK POCKET.
5. SAFETY RAILING AS REQUIRED (BY OTHERS).
6. 1" DIA. WEEP HOLES AT 32" O.C.

103 2'–0" CONCRETE RETAINING WALL
154–05M NOT TO SCALE

24113–C8.dwg 7/26/2024 9:31 AM

GENERAL STRUCTURAL NOTES

BUILDING CODE:

2018 INTERNATIONAL BUILDING CODE, (IBC) WITH APPLICABLE CITY AMENDMENTS.

LATERAL LOADS :

WIND:
ULTIMATE DESIGN WIND SPEED = 115 MPH (3s GUST).
NOMINAL DESIGN WIND SPEED = 90 MPH (3s GUST).
RISK CATEGORY: II
WIND EXPOSURE: C.
INTERNAL PRESSURE COEFFICIENT (ENCLOSED BUILDINGS): +0.18 / –0.18

FOUNDATIONS:

SOIL REPORT BY ETC; JOB NO. 6270. SPREAD FOOTINGS SHALL BEAR ON FIRM, UNDISTURBED SOIL 24" MINIMUM BELOW ADJACENT FINISHED GRADE, PAD GRADE OR EXISTING GRADE AS STATED IN SOILS REPORT. FINISHED GRADE IS DEFINED AS TOP OF SLAB FOR INTERIOR FOOTINGS AND LOWEST ADJACENT GRADE WITHIN 5 FEET OF PERIMETER FOOTINGS.

DESIGN SOIL BEARING VALUE: 2000 PSF. (CONTINUOUS FOOTINGS)

REFER TO SOILS REPORT FOR ADDITIONAL INFORMATION PRIOR TO COMMENCEMENT OF EARTHWORK. BEFORE ANY CONCRETE IS PLACED, EXCAVATION SHALL BE CHECKED AND APPROVED BY A QUALIFIED SOILS ENGINEER.

STRUCTURAL CONCRETE:

ALL CAST–IN–PLACE CONCRETE CONSTRUCTION HAS BEEN DESIGNED ACCORDING TO ACI 318–14 AND SHALL CONFORM TO THE FOLLOWING:

CEMENT SHALL CONFORM TO ASTM C–150 TYPE I OR II.
MIXING SHALL CONFORM TO ASTM C–94.
AGGREGATES (NORMAL WEIGHT CONCRETE) SHALL CONFORM TO ASTM C–33.

THE MINIMUM COMPRESSIVE STRENGTH OF CONCRETE (F'c) AT 28 DAYS SHALL BE:

FOUNDATIONS (DESIGN BASED ON 2,500 PSI) ----------------- 3,000 PSI
FLAT SLABS, BEAMS, WALLS AND GRADE BEAMS --------------- 3,000 PSI

1 ALL CONCRETE SHALL BE MECHANICALLY VIBRATED AND THOROUGHLY CONSOLIDATED DURING PLACEMENT AND SHALL BE THOROUGHLY WORKED AROUND REINFORCEMENT AND EMBEDDED FIXTURES AND INTO CORNERS OF THE FORMS UNLESS NOTED OTHERWISE.
2 SLUMP RANGE SHALL BE 4–6 INCHES. ADMIXTURES MAY NOT BE USED WITHOUT THE SPECIFIC PRIOR WRITTEN APPROVAL FROM THE ARCHITECT/STRUCTURAL ENGINEER. ADMIXTURES USING ANY FORM OF CHLORIDES SHALL NOT BE USED.
3 THE EMBEDMENT OF ANY CONDUITS, PIPES, SLEEVES, ETC. SHALL NOT BE PERMITTED WITHIN ANY CONCRETE STRUCTURAL ELEMENT (IE: COLUMNS, BEAMS, ELEVATED SLABS, ETC.) WITHOUT WRITTEN APPROVAL FROM SIMPLY STRUCTURAL INC. UNLESS NOTED OTHERWISE ON THE DRAWINGS.
4 FLY ASH – IF PERMITTED BY ARCHITECTURAL SPECIFICATIONS, SHALL CONFORM TO "STANDARD SPECIFICATIONS FOR COAL FLY ASH AND RAW OR CALCINED NATURAL POZZOLAN FOR USE IN CONCRETE" (ASTM C 618). FLY ASH SHALL NOT BE USED IN ARCHITECTURALLY EXPOSED CONCRETE, ON SLABS WITH A BURNISHED OR ACID FINISH, OR WHERE IT COULD NEGATIVELY EFFECT ANY MATERIAL IN CONTACT WITH IT.
5 TESTING OF CONCRETE – SAMPLES FOR STRENGTH TESTS OF EACH CLASS OF CONCRETE PLACED EACH DAY SHALL BE TAKEN NOT LESS THAN: ONCE A DAY, NOR LESS THAN ONCE FOR EACH 150–YD3 OF CONCRETE NOR LESS THAN ONCE FOR EACH 5,000–FT2 OF SURFACE AREA FOR SLABS OR WALLS. SAMPLES SHALL BE TAKEN IN ACCORDANCE WITH "STANDARD PRACTICE FOR MAKING AND CURING CONCRETE TEST SPECIMENS IN THE FIELD" (ASTM C 31); AND TESTED IN ACCORDANCE WITH "STANDARD TEST METHOD FOR COMPRESSIVE STRENGTH OF CYLINDRICAL CONCRETE SPECIMENS" (ASTM C 39).
6 TEST DATA FOR CONCRETE SUBMITTALS – TEST DATA SHALL BE SUBMITTED FOR REVIEW PER ACI 318 CHAPTER 5. REFERENCE TABLE R5.3 FOR SPECIFIC REQUIREMENTS.

LAP SPLICES IN CONCRETE:

1 LAP SPLICES SHALL BE STAGGERED A MINIMUM OF ONE LAP LENGTH AND SHALL BE CLASS "B" TENSION LAP SPLICES PER ACI 318–14 UNLESS NOTED OTHERWISE.
2 DOWEL VERTICAL REINFORCING TO FOUNDATION WITH STANDARD 90–DEGREE HOOKS UNLESS NOTED OTHERWISE.
3 MATCHING REINFORCING BARS SHALL BE INSTALLED IN ALL CORNERS, JAMBS AND WALL INTERSECTIONS (24" X 24").
4 LAPS IN WELDED WIRE FABRIC SHALL BE MADE SO THAT THE OVERLAP MEASURED BETWEEN OUTERMOST CROSS WIRES OF EACH FABRIC SHEET, IS NOT LESS THAN THE SPACING OF CROSS WIRES PLUS 2 INCHES.
5 ONLY WHEN SPECIFICALLY NOTED ON DRAWINGS MAY CONCRETE COLUMN DOWEL EMBEDMENT AND LAP SPLICES IN CONCRETE COLUMNS BE STANDARD COMPRESSION LAP SPLICES.
6 ALL SPLICE LOCATIONS SUBJECT TO APPROVAL BY THE STRUCTURAL ENGINEER.

REINFORCING STEEL:

LATEST ACI 318–14 CODE AND DETAILING MANUAL APPLY. ALL REINFORCING SHALL BE CHAIRED TO ENSURE PROPER CLEARANCES. SUPPORT OF FOUNDATION REINFORCING MUST PROVIDE ISOLATION FROM MOISTURE/CORROSION BY USE OF PLASTIC OR CONCRETE CHAIR. DUCT–TAPE COVERED REINFORCING IS NOT AN ACCEPTABLE CHAIR. ALL DIMENSIONS REFERENCED IN DRAWINGS AS "CLEAR" SHALL BE FROM FACE OF STRUCTURE TO EDGE OF REINFORCING, AND SHALL NOT BE LESS THAN STATED, NOR GREATER THAN "CLEAR" DIMENSION PLUS 3/8". ALL OTHERS SHALL BE PLUS OR MINUS 1/4" TYPICAL UNLESS NOTED OTHERWISE. ALL REINFORCING SHALL BE SECURELY TIED IN PLACE TO PREVENT MOVEMENT DURING CONCRETE PLACEMENT. DEFORMED REINFORCING SPECIFICATIONS AS FOLLOWS:

1 ASTM A615 (Fy = 60 KSI) FOR ALL BARS.

CLEAR CONCRETE COVERAGE'S OF ALL STEEL SHALL BE:

CAST AGAINST AND PERMANENTLY EXPOSED TO EARTH --------------- 3"
EXPOSED TO EARTH OR WEATHER:
#6 OR LARGER -------------------------------------- 2"
#5 AND SMALLER ------------------------------------ 1 1/2"

STRUCTURAL STEEL:

THE DESIGN, FABRICATION AND ERECTION OF STRUCTURAL STEEL FOR BUILDINGS AND STRUCTURES SHALL BE IN ACCORDANCE WITH AISC 360. FOR ALL STEEL WHERE Fy > 36 KSI, THE ASTM OR OTHER SPECIFICATION DESIGNATION SHALL BE INCLUDED NEAR THE ERECTION MARK ON EACH SHIPPING ASSEMBLY OR IMPORTANT CONSTRUCTION COMPONENT OVER ANY SHOP COAT OF PAINT PRIOR TO SHIPMENT FROM THE FABRICATOR'S PLANT. USE THE FOLLOWING MINIMUM PROPERTIES UNLESS NOTED OTHERWISE:

* ROUND HSS SHALL BE ASTM A500 GRADE C (Fy = 42 KSI).

SHOP DRAWINGS:

USE OF DRAWINGS CREATED BY SIMPLY STRUCTURAL INC. ARE NOT ACCEPTABLE FOR USE AS SHOP DRAWINGS. ANY SUBMITTALS CONTAINING SUCH WILL BE REJECTED WITHOUT REVIEW.

1. SIMPLY STRUCTURAL INC. ASSUMES NO RESPONSIBILITY FOR THE FAILURE OF THE CONTRACTOR TO PROVIDE SHOP DRAWINGS FOR REVIEW. SIMPLY STRUCTURAL INC. WILL REVIEW COMPLETED CONTRACTORS SHOP DRAWINGS AND OTHER APPROPRIATE SUBMITTALS THAT ARE A PROPERLY FUNCTIONING AND INTEGRAL ELEMENT OF THE OVERALL STRUCTURAL SYSTEM DESIGNED BY SIMPLY STRUCTURAL INC. REVIEWING IS INTENDED ONLY AS AN AID TO THE CONTRACTOR IN OBTAINING CORRECT SHOP DRAWINGS.
2. SHOP DRAWINGS SUBMITTALS SHALL INCLUDE AT A MINIMUM:
   A LAYOUT PLAN KEYED TO TRUSS/JOIST/BEAMS ETC.
   B CLEARLY DEFINED DESIGN LOADS.
   C SEAL AND SIGNATURE OF A LICENSED ENGINEER IN THE STATE OF CONSTRUCTION AFFIXED DIRECTLY TO BOUND DOCUMENTS.
3. BEFORE SUBMITTING SHOP DRAWINGS OR ANY RELATED MATERIAL, THE CONTRACTOR SHALL:
   A REVIEW EACH SUBMISSION FOR CONFORMANCE WITH THE MEANS, METHODS, TECHNIQUES, SEQUENCES, OPERATIONS OF CONSTRUCTION, AND SAFETY PRECAUTIONS AND PROGRAMS ALL OF WHICH ARE THE SOLE RESPONSIBILITY OF THE CONTRACTOR.
   B APPROVE AND STAMP AND SIGN EACH SUBMISSION BEFORE SUBMITTING IT.
   C ITEMS NOT IN ACCORDANCE WITH CONTRACT DOCUMENTS SHALL BE FLAGGED UPON CONTRACTOR'S REVIEW. SIMPLY STRUCTURAL INC. SHALL ASSUME THAT NO SHOP DRAWING OR RELATED SUBMITTAL COMPRISES A VARIATION UNLESS THE CONTRACTOR ADVISES SIMPLY STRUCTURAL INC. IN WRITING.
   D VERIFY ALL DIMENSIONS WITH ARCHITECT.
4. THE ENGINEER HAS THE RIGHT TO APPROVE OR DISAPPROVE ANY CHANGES TO CONTRACT DOCUMENTS AT ANYTIME BEFORE OR AFTER SHOP DRAWING REVIEW.
5. THE SHOP DRAWINGS DO NOT REPLACE THE CONTRACT DOCUMENTS. ITEMS OMITTED OR SHOWN INCORRECTLY AND ARE NOT FLAGGED BY THE STRUCTURAL ENGINEER OR ARCHITECT SHALL NOT BE CONSIDERED CHANGES TO CONTRACT DOCUMENTS. IT IS THE CONTRACTOR'S RESPONSIBILITY TO ENSURE ALL ITEMS ARE CONSTRUCTED ACCORDING TO THE CONTRACT DOCUMENTS.
6. SIMPLY STRUCTURAL INC. WILL REDLINE UP TO FIVE COPIES OF EACH SUBMITTAL. FOUR WILL BE RETURNED TO THE SUBMITTING PARTY OR CONTRACTOR. SIMPLY STRUCTURAL INC. WILL RETAIN ONE COPY OF EACH SUBMITTAL FOR REFERENCE AND RECORDS.

GENERAL NOTES:

1. THE STRUCTURAL CONSTRUCTION DOCUMENTS REPRESENT THE FINISHED STRUCTURE. THEY DO NOT INDICATE THE METHOD OF CONSTRUCTION. DURING CONSTRUCTION, THE CONTRACTOR SHALL BE RESPONSIBLE FOR THE SAFETY OF THE BUILDING AND THE CONSTRUCTION SITE. THE CONTRACTOR SHALL USE ADEQUATE SHORING, BRACING, AND GUYS IN ACCORDANCE WITH ALL NATIONAL, STATE AND LOCAL SAFETY ORDINANCES. THE STRUCTURAL ENGINEER OF RECORD SHALL NOT BE RESPONSIBLE FOR THE CONTRACTOR'S MEANS, METHODS, TECHNIQUES, SEQUENCES FOR PROCEDURE OF CONSTRUCTION, OR THE SAFETY PRECAUTIONS AND THE PROGRAMS INCIDENT THERETO (NOR SHALL OBSERVATION VISITS TO THE SITE INCLUDE OR IMPLY INSPECTION OF THESE ITEMS).
2. WHERE REFERENCE IS MADE TO VARIOUS TEST STANDARDS FOR MATERIALS, SUCH STANDARDS SHALL BE THE LATEST EDITION AND/OR ADDENA. ANY ENGINEERING DESIGN, PROVIDED BY OTHERS AND SUBMITTED FOR REVIEW, SHALL BEAR THE SEAL OF A REGISTERED ENGINEER RECOGNIZED BY THE BUILDING CODE JURISDICTION OF THIS PROJECT.
3. NOTES AND DETAILS ON DRAWINGS SHALL TAKE PRECEDENCE OVER GENERAL STRUCTURAL NOTES AND TYPICAL DETAILS. WHERE NO DETAILS ARE SHOWN, CONSTRUCTION SHALL CONFORM TO SIMILAR WORK ON THE PROJECT, AND/OR PROVIDED FOR IN THE CONTRACT DOCUMENTS. WHERE DISCREPANCIES OCCUR BETWEEN PLANS, DETAILS, GENERAL STRUCTURAL NOTES AND SPECIFICATIONS, THE MOST STRINGENT REQUIREMENT SHALL GOVERN.
4. CONTRACTOR SHALL BE RESPONSIBLE FOR VERIFICATION OF ALL DIMENSIONS WITH ARCHITECTURAL DRAWINGS PRIOR TO START OF CONSTRUCTION. RESOLVE ANY DISCREPANCY WITH THE ARCHITECT. ESTABLISH AND VERIFY ALL OPENINGS AND INSERTS FOR ARCHITECTURAL, CIVIL, MECHANICAL, PLUMBING AND ELECTRICAL ITEMS WITH APPROPRIATE TRADE DRAWINGS AND SUBCONTRACTORS PRIOR TO CONSTRUCTION.
5. TYPICAL DETAILS MAY NOT NECESSARILY BE CUT ON PLANS, BUT APPLY UNLESS NOTED OTHERWISE.
6. CONSTRUCTION MATERIALS SHALL BE SPREAD OUT IF PLACED ON FRAMED CONSTRUCTION, LOAD SHALL NOT EXCEED THE DESIGN LIVE LOAD PER SQUARE FOOT.
7. OPTIONS ARE FOR CONTRACTOR'S CONVENIENCE. IF AN OPTION IS CHOSEN, CONTRACTOR SHALL BE RESPONSIBLE FOR ALL NECESSARY CHANGES, APPROVALS AND THE COORDINATION OF THE WORK WITH ALL RELATED TRADES AND SUPPLIERS.

STATEMENT OF SPECIAL STRUCTURAL INSPECTIONS:

IN ADDITION TO THE INSPECTIONS REQUIRED BY SECTION 110 OF THE INTERNATIONAL BUILDING CODE, SPECIAL STRUCTURAL INSPECTION IS REQUIRED FOR THE WORK LISTED BELOW AS STATED IN SECTION 1704 AND 1705 OF THE INTERNATIONAL BUILDING CODE. THE SPECIAL INSPECTOR SHALL OBSERVE THE WORK/TESTING ASSIGNED FOR CONFORMANCE WITH THE APPROVED DRAWINGS AND SPECIFICATIONS.

1. CONCRETE CONSTRUCTION: (REFERENCE IBC TABLE 1705.3)
   * CONTINUOUSLY DURING THE TAKING OF TEST SPECIMENS AND PLACING OF ALL CONCRETE.
   * NO INSPECTION IS REQUIRED DURING PLACEMENT OF CONCRETE FOR SLABS ON GRADE OR SPREAD FOOTINGS FOR LIGHT FRAMED BUILDINGS UP TO 3 STORIES TALL (PLACEMENT OF ALL SLAB AND FOOTING REINFORCING REQUIRES SPECIAL INSPECTION AS NOTED BELOW).
   * VERIFY USE OF REQUIRED DESIGN STRENGTH.
2. REINFORCING STEEL: (REFERENCE IBC SECTION 1705.3 AND TABLE 1705.3)
   INSPECTION OF IN PLACE REINFORCING. THE SPECIAL INSPECTOR NEED NOT BE PRESENT CONTINUOUSLY DURING PLACEMENT OF REINFORCING STEEL PROVIDED THE SPECIAL INSPECTOR HAS INSPECTED FOR CONFORMANCE. PRIOR TO CLOSING FORMS OR THE DELIVERY OF CONCRETE TO THE JOBSITE.
   * FOR ALL CONCRETE HAVING SPECIAL STRUCTURAL INSPECTION PER ITEM 1.
   * FOR SLABS ON GRADE.
   * FOR CONCRETE FOOTINGS.

SPECIAL STRUCTURAL INSPECTION NOTES:

1. CONTACT SIMPLY STRUCTURAL INC. PRIOR TO THE START OF CONSTRUCTION FOR ADDITIONAL INFORMATION.
2. SPECIAL INSPECTOR SHALL FURNISH INSPECTION REPORTS TO THE BUILDING OFFICIAL, THE ENGINEER OR ARCHITECT OF RECORD, AND OTHER DESIGNATED PERSONS AT A MINIMUM OF ONCE PER WEEK.
3. THE SPECIAL INSPECTOR SHALL SUBMIT A FINAL SIGNED REPORT STATING WHETHER THE WORK REQUIRING SPECIAL INSPECTION WAS, TO THE BEST OF THE INSPECTOR'S KNOWLEDGE, IN CONFORMANCE TO THE APPROVED PLANS AND SPECIFICATIONS AND THE APPLICABLE WORKMANSHIP PROVISIONS OF THE BUILDING CODE.
4. ALL DISCREPANCIES SHALL BE BROUGHT TO THE IMMEDIATE ATTENTION OF THE CONTRACTOR, THEN, IF UNCORRECTED, THE PROPER DESIGN AUTHORITY AND THE BUILDING OFFICIAL. THE SPECIAL INSPECTOR IS NOT AUTHORIZED TO APPROVE DEVIATIONS FROM THE DESIGN DRAWINGS OR SPECIFICATIONS.
5. CONTRACTOR SHALL PROVIDE THE SPECIAL INSPECTOR SAFE ACCESS TO ALL ITEMS REQUIRING SPECIAL INSPECTION. ACCESS SHALL BE PROVIDED VIA IN–PLACE LADDERS, SCAFFOLDING, AND/OR CONTRACTOR OPERATED LIFTS AS REQUIRED FOR SAFE OBSERVATION.
6. SPECIAL INSPECTIONS SHALL BE PERFORMED UNDER THE DIRECT SUPERVISION OF A STATE LICENSED STRUCTURAL ENGINEER. WHO IS FAMILIAR WITH THE STRUCTURAL DESIGN OF THIS PROJECT. THE SUPERVISING STRUCTURAL ENGINEER SHALL SEAL THE SPECIAL INSPECTION CERTIFICATE.
7. CONTACT SIMPLY STRUCTURAL INC. FOR SPECIAL STRUCTURAL INSPECTIONS IN THE PHOENIX AREA AT (602) 443–0303 PRIOR TO STARTING CONSTRUCTION.

SPECIAL GEOTECHNICAL INSPECTION:

1. EXCAVATION, GRADING AND FILL (BY SOILS ENGINEER) (REFERENCE TABLE 1705.6). SOILS ENGINEER SHALL PROVIDE OBSERVATION AND TESTING SERVICES DURING THE GRADING AND FOUNDATION PHASE OF CONSTRUCTION. INSPECTION AND TESTING REPORTS SHALL BE SUBMITTED TO THE BUILDING DEPARTMENT AND SIMPLY STRUCTURAL INC.

STANDARD ABBREVIATIONS

A.B.	ANCHOR BOLT	I.J.	ISOLATION JOINT
A.B.C.	AGGREGATE BASE COURSE	INFO.	INFORMATION
A/C	AIR CONDITIONER	INT.	INTERIOR
A.F.F.	ABOVE FINISHED FLOOR	JT.	JOINT
ALT.	ALTERNATE	K(KIP)	1000 POUNDS
APPROX.	APPROXIMATELY	L	ANGLE
@	AT (MEASUREMENT)	LBS (#)	POUNDS
ARCH.	ARCHITECTURAL	LG.	LONG
BLDG.	BUILDING	L.L.	LIVE LOAD
BM.	BEAM	LLH	LONG LEG HORIZONTAL
B.F.F.	BELOW FINISHED FLOOR	LLV	LONG LEG VERTICAL
B.O.B.	BOTTOM OF BEAM	LONG.	LONGITUDINAL
B.O.D.	BOTTOM OF DECK	MFR.	MANUFACTURER
B.O.F.	BOTTOM OF FOOTING	MAS.	MASONRY
BOTT.	BOTTOM	MAS. C.J.	MASONRY CONTROL JOINT
BRG.	BEARING	MAT'L.	MATERIAL
CANT.	CANTILEVER	MAX.	MAXIMUM
C.I.P.	CAST IN PLACE	MIN.	MINIMUM
C.J.	CONSTRUCTION JOINT	MISC.	MISCELLANEOUS
CL	CENTERLINE	N/A	NOT APPLICABLE
CLR.	CLEAR	N.T.S.	NOT TO SCALE
CMU	CONCRETE MASONRY UNIT	O.C.	ON CENTER
COL.	COLUMN	OPNG.	OPENING
CONC.	CONCRETE	PREFAB	PREFABRICATED
CONT.	CONTINUOUS	PL	PLATE
CONTR.	CONTRACTOR	plf	POUNDS PER LINEAR FOOT
CTR.	CENTER	psf	POUNDS PER SQUARE FOOT
DTL.	DETAIL	psi	POUNDS PER SQUARE INCH
DIA.	DIAMETER	P.T.	POST TENSION OR PRESSURE TREATED
DIM.	DIMENSION	REINF.	REINFORCING
D.L.	DEAD LOAD	REQ'D.	REQUIRED
ø OR DIA.	DIAMETER	REV.	REVISED/ REVISION
DN.	DOWN	SCHED.	SCHEDULE
DWG.	DRAWING	SIM.	SIMILAR
EA.	EACH	S.I.P.	STRUCTURAL INSULATED PANEL
E.E.	EACH END	SLH	SHORT LEG HORIZONTAL
E.F.	EACH FACE	SLV	SHORT LEG VERTICAL
E.J.	EXPANSION JOINT	SQ.	SQUARE
EL.	ELEVATION	STD.	STANDARD
EQ.	EQUAL	SW	SHEARWALL
E.W.	EACH WAY	STL.	STEEL
EXIST.	EXISTING	STRUCT.	STRUCTURAL
EXP.	EXPANSION	T.C.	TOP CHORD
FIN.	FINISH	T.O.B.	TOP OF BEAM
FLR.	FLOOR	T.O.D.	TOP OF DECK
FDN.	FOUNDATION	T.O.F.	TOP OF FOOTING
F.F.	FINISHED FLOOR	T.O.L.	TOP OF LEDGER
FT.	FOOT	T.O.M.	TOP OF MASONRY
FTG.	FOOTING	T.O.P.	TOP OF PLATE
GA.	GAGE	T.O.S.	TOP OF STEEL
GALV.	GALVANIZED	T.O.W.	TOP OF WALL
G.C.	GENERAL CONTRACTOR	TRANS.	TRANSVERSE
G.L.B.	GLUE–LAMINATED BEAM	TYP.	TYPICAL
G.S.N.	GENERAL STRUCTURAL NOTES	U.N.O.	UNLESS NOTED OTHERWISE
H.A.S.	HEADED ANCHOR STUD	VERT.	VERTICAL
HC	HOLLOW CORE	V.S.	VALLEY SET
HG	HIP GIRDER	WD.	WOOD
HORIZ.	HORIZONTAL	W/	WITH
H.P.	HIGH POINTS	W/C	WATER/CEMENT RATIO
I.B.C.	INTERNATIONAL BUILDING CODE	W/O	WITHOUT
I.C.C.	INTERNATIONAL CODE COUNSEL	WP	WORK POINT
I.R.C.	INTERNATIONAL RESIDENTIAL CODE	W.W.F.	WELDED WIRE FABRIC

Registered Professional Engineer (Structural) No. 36714 MICHAEL J. WILDA Date Signed 07/26/24 ARIZONA, U.S.A. Exp. 9/30/25

#24-113
ENG:GS
Simply Structural Inc.
730 N. 52nd Street, Suite 105
Phoenix, Arizona 85008
602-443-0303
Fax 602-443-0404
mwilda@simplystructural.com
www.simplystructural.com

THESE DRAWINGS ARE THE INSTRUMENTS OF SERVICE AND ARE THE PROPERTY OF SIMPLY STRUCTURAL INC.; SIMPLY STRUCTURAL INC., EXPRESSLY RESERVES ITS COMMON LAW COPYRIGHT AND OTHER PROPERTY RIGHTS TO THESE PLANS. THESE PLANS ARE NOT TO BE REPRODUCED, CHANGED OR COPIED IN ANY FORM OR MANNER WHATSOEVER, NOR ARE THEY TO BE ASSIGNED TO ANY THIRD PARTY, WITHOUT FIRST OBTAINING THE EXPRESSED WRITTEN PERMISSION AND CONSENT OF SIMPLY STRUCTURAL INC.

WRITTEN DIMENSIONS ON THESE DRAWINGS SHALL HAVE PRECEDENCE OVER SCALED DIMENSIONS.

COPYRIGHT 2024, SIMPLY STRUCTURAL INC.

BILLING CYCLE PER SENATE BILL 1549
BILLING CYCLE: 30 DAYS
APPROVAL AND CERTIFICATION: 30 DAYS PAYMENT PERIOD: 7 DAYS

JCS CONTRACTING RETAINING WALLS
Prescott Airpark Unit 5
Prescott, AZ

GSN AND RETAINING WALL DETAILS

CITY OF PRESCOTT ARIZONA

REVISIONS

Job Number: #24-113
Checked By: GS
Drawn By: LV
Date: 7/24/24
Scale: AS NOTED

C8

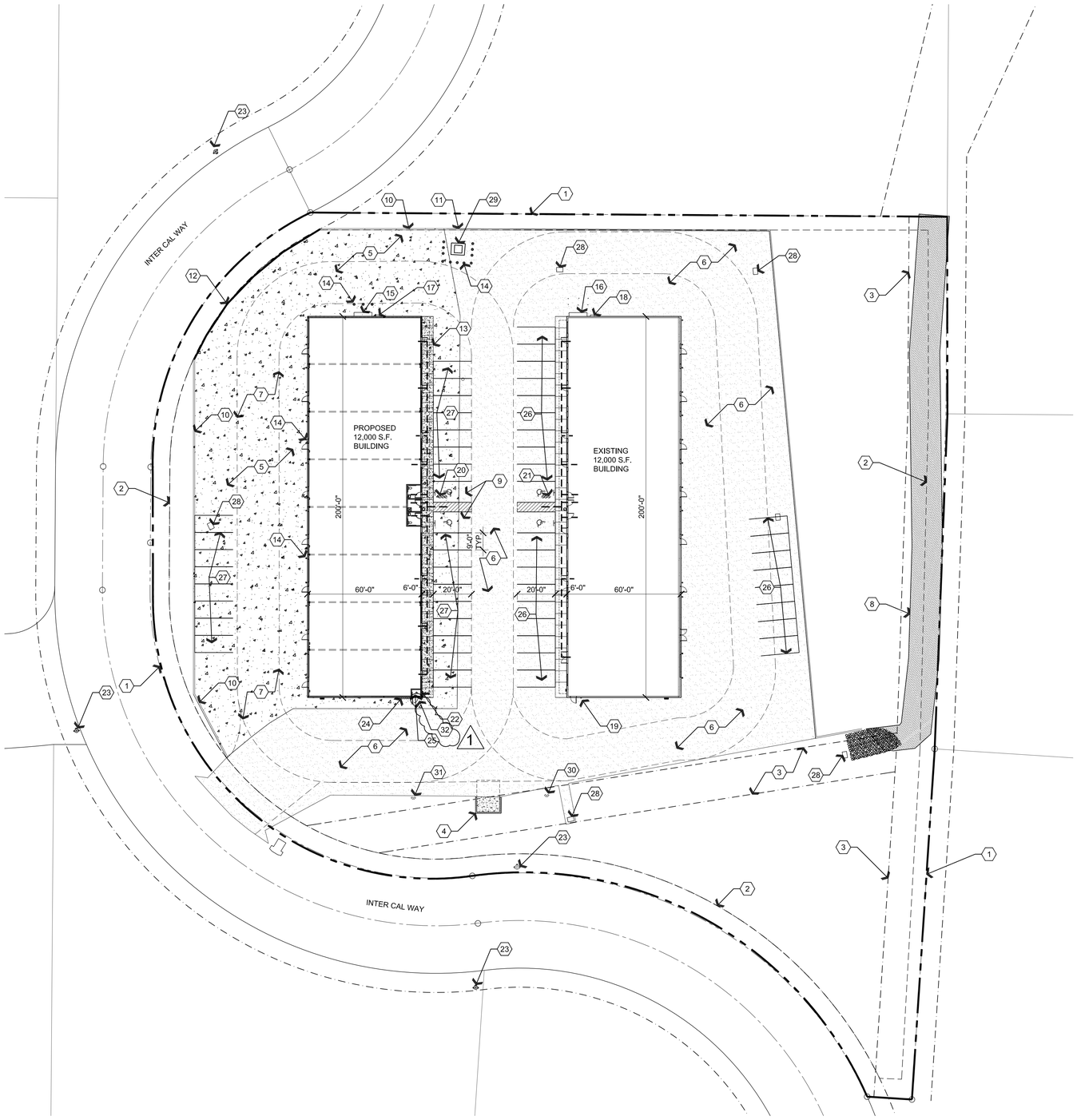

A1 Architectural Site Plan

Scale: 1"=30'-0"

Plan North

Descriptive Keynotes

1. PROPERTY LINE.
2. BUILDING SETBACK LINE.
3. EASEMENT LINE.
4. EXISTING 6'-0" HIGH DUMPSTER ENCLOSURE IN ACCORDANCE WITH CITY OF PRESCOTT'S STANDARD DETAIL NO. 4-15P.
5. PROVIDE CONCRETE PAVEMENT OVER COMPACTED A.B.C., REFER TO CIVIL PLANS.
6. EXISTING CONCRETE PAVEMENT.
7. PROPOSED 20' FIRE LANE.
8. EXISTING GROUTED OPEN CHANNEL.
9. PROVIDE ADA ACCESSIBLE PARKING, REFER TO DETAILS C1/A0.1 & D1/A0.1, AND CIVIL PLANS.
10. PROVIDE CAST IN PLACE CONCRETE CURB, REFER TO CIVIL PLANS.
11. EXISTING CONCRETE CURB.
12. PROVIDE CONCRETE RETAINING WALL, REFER TO CIVIL PLANS.
13. PROVIDE CONCRETE SIDEWALK OVER COMPACTED A.B.C., REFER TO CIVIL PLANS.
14. PROVIDE 6'-0" LONG, 4" DIAMETER, CONCRETE FILLED, PROTECTIVE STEEL BOLLARDS, EMBEDDED 2'-0" BELOW GRADE INTO CONCRETE FOOTING, TYPICAL AT EACH ROLL-UP DOOR AND AS INDICATED ELSEWHERE.
15. PROVIDE ELECTRICAL SERVICE ENTRANCE SECTION, REFER TO ELECTRICAL PLANS.
16. EXISTING ELECTRICAL SERVICE ENTRANCE SECTION.
17. PROVIDE CABLE TV TERMINAL BOX.
18. EXISTING CABLE TV TERMINAL BOX.
19. EXISTING NATURAL GAS METERS / REGULATORS.
20. PROVIDE 2-WAY SEWER CLEAN OUT AND BACKWATER VALVE, REFER TO PLUMBING PLANS.
21. EXISTING 2-WAY SEWER CLEAN OUT AND BACKWATER VALVE.
22. PROVIDE FIRE DEPARTMENT CONNECTION WITH LOCKING CAPS.
23. EXISTING FIRE HYDRANT.
24. PROVIDE NATURAL GAS METERS / REGULATORS, REFER TO PLUMBING PLANS.
25. PROVIDE FIRE RISER.
26. EXISTING PARKING SPACE, TYP.
27. PROVIDE PARKING SPACE, TYP.
28. EXISTING DRAINAGE BASIN.
29. EXISTING ELECTRICAL TRANSFORMER.
30. EXISTING REMOTE FDC.
31. PROVIDE REMOTE FDC.
32. PROVIDE FIRE DEPARTMENT KNOX BOX. 1

NOTE: LANDSCAPING IS EXISTING UNDER PREVIOUS PERMIT # B2105-010

REVISIONS	BY
1 City of Prescott Comments 10/8/2024	LO

These drawings are the property of W. Alan Kenson & Associates P.C., and may not be reproduced in any way without the written consent of W. Alan Kenson & Associates, P.C.

REGISTERED ARCHITECT CERTIFICATE NO. 25646 W. ALAN KENSON Date Signed 07/31/24 ARIZONA U.S.A. EXPIRES: 6/30/27

W. Alan Kenson & Associates, P.C.
P 928-443-5812 P.O. Box 11593
F 928-443-5815 Prescott, AZ 86304
email: waka@cableone.net
www.kenson-associates.com
ARCHITECTURE & PLANNING

DRAWING: Architectural Site Plan

PROJECT: JSC Contracting Building B
6601 Inter Cal Way
Prescott, AZ 86301

APN: 103-50-054D

CNPLANS B2407-176 6601 INTER CAL WAY PLANS

DRAWN BY	L.O.
CHECKED BY	W.A.K.
DATE	July 31st, 2024
JOB NO.	799
SHEET	A0.0

Oct 21, 2024 - 1:22pm

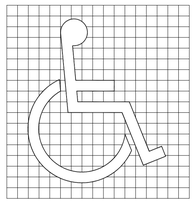

PROPORTIONS

DISPLAY CONDITIONS

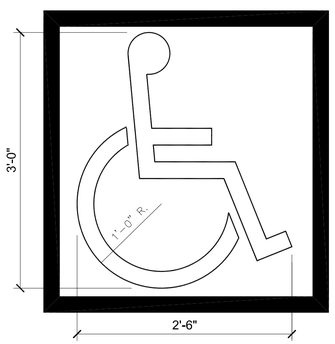

SYMBOL @ PARKING SPACE

C1 ADA Symbol of Accessibility

SCALE: N.T.S.

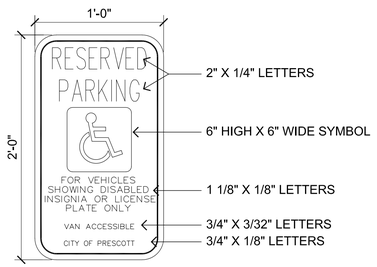

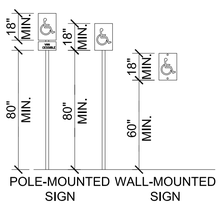

1. THE SIGN PLATE SHALL BE A MINIMUM OF 12"x24" WITH A THICKNESS OF .080 ALUMINUM CONSTRUCTION.
2. THE SIGN FACE SHALL HAVE A WHITE REFLECTIVE BACKGROUND WITH A BLUE LEGEND. (STANDARD 3M SCOTCHLITE SIGN FACE NUMBER R7-32 OR EQUIVALENT, WITH BLUE SCREEN PRINTED LETTER AS SHOWN ABOVE.)
3. ALL ACCESSIBLE PARKING SPACES SHALL BE IDENTIFIED BY A SIGN ON A CITY APPROVED STATIONARY POST OR WALL LOCATION. THESE SIGNS SHALL NOT BE OBSCURED.
4. ACCESSIBLE PARKING SPACES SHALL BE DESIGNATED AS RESERVED FOR PHYSICALLY DISABLED BY A SIGN SHOWING THE INTERNATIONAL WHEELCHAIR SYMBOL IN COLOR SCHEME ON CONTRASTING BACKGROUND.
5. THE SIGN SHALL HAVE THE MINIMUM VERBIAGE OF "RESERVED PARKING" AND INTERNATIONAL WHEELCHAIR SYMBOL.

D1 Accessible Parking Signage

SCALE: N.T.S.

REVISIONS	BY

These drawings are the property of W. Alan Kenson & Associates P.C., and may not be reproduced in any way without the written consent of W. Alan Kenson & Associates, P.C.

REGISTERED ARCHITECT
CERTIFICATE NO. 25646
W. ALAN KENSON
Date Signed 07/31/24
ARIZONA U.S.A.
EXPIRES: 6/30/27

W. Alan Kenson & Associates, P.C.
P 928-443-5812
F 928-443-5815
P.O. Box 11593
Prescott, AZ 86304
email: waka@cableone.net
www.kenson-associates.com
ARCHITECTURE & PLANNING

DRAWING: Site Details

PROJECT: JSC Contracting Building B
6601 Inter Cal Way
Prescott, AZ 86301

APN: 103-50-054D
CNPLANS_B2407-176 6601 INTER CAL WAY PLANS

DRAWN BY	L.O.
CHECKED BY	W.A.K.
DATE	July 31st, 2024
JOB NO.	799
SHEET	A0.1

Jul 31, 2024 - 8:58am

Wall Types Legend

- (A) EXTERIOR METAL BUILDING WALL: PROVIDE EXTERIOR METAL BUILDING SIDING 'A' PANELS OVER 8" HORIZONTAL GIRTS. PROVIDE R-30 (9") PROLINER™ SYSTEM (WHITE). (1)
- (B) EXTERIOR METAL STUD WALL: PROVIDE 6" 18 GA. STEEL STUDS AT 2'-0" O.C. PROVIDE R-19 UNFACED BATT INSULATION. ON EXTERIOR SIDE PROVIDE METAL BUILDING SIDING 'A' PANELS OVER 1/2" HAT CHANNELS AT 48" O.C. RUNNING HORIZONTALLY.
- (C) 6" STUD WALL: PROVIDE 6" 25 GA. STEEL STUDS AT 2'-0" O.C. WITH 5/8" GPDW ON EXPOSED SIDES. PROVIDE R-19 UNFACED BATT INSULATION.
- (D) 3-5/8" STUD WALL: PROVIDE 3-5/8", 25 GA. STEEL STUDS @ 2'-0" O.C. WITH 5/8" GPDW ON EXPOSED SIDES. PROVIDE R-11UNFACED BATT INSULATION.
- 8'-0" HIGH METAL WALL LINER 'R' PANELS
- 4'-0" HIGH FRP

Descriptive Keynotes

1. PROPOSED POTENTIAL FUTURE LOCATION OF WALLS.
2. PROVIDE 4" CONCRETE SIDEWALK OVER 4" COMPACTED A.B.C., REFER TO SITE PLAN AND CIVIL PLANS.
3. PROVIDE INTERIOR WALL, REFER TO WALL TYPES LEGEND FOR TYPE OF CONSTRUCTION.
4. PROVIDE ELECTRICAL SERVICE ENTRANCE SECTION, REFER TO ELECTRICAL PLANS.
5. PROVIDE TYPE 2A10BC FIRE EXTINGUISHER IN SURFACE MOUNTED WALL CABINET. FIRE EXTINGUISHERS SHALL BE PROVIDED IN ACCORDANCE WITH THE INTERNATIONAL FIRE CODE (IFC) AND NFPA 10.
6. PROVIDE FIRE ALARM CONTROL PANEL.
7. PROVIDE DOOR, REFER TO DOOR SCHEDULE. (TYPICAL)
8. PROVIDE ROLL UP DOOR, REFER TO DOOR SCHEDULE. (TYPICAL)
9. PROVIDE STEEL COLUMN, REFER TO STRUCTURAL PLANS. (TYPICAL)
10. ELECTRIC DRINKING FOUNTAIN, REFER TO PLUMBING PLANS.
11. LINE OF CANOPY ABOVE.
12. PROVIDE A 6"x9" BLUE TACTILE, BRAILLE, 'EXIT' SIGN AS MANUFACTURED BY 'SIMPLY EXIT SIGNS (#SE-1980)' OR EQUAL COMPLYING WITH ICC/ANSI A117.1 SECTION 703.1 AND IBC 1013 & SECTION 1111, ADJACENT TO EACH DOOR TO AN EXIT PASSAGEWAY AND THE EXIT DISCHARGE.

EXIT SIGNS:

- PROVIDE A 6"x9" BLUE TACTILE, BRAILLE, 'EXIT' SIGN AS MANUFACTURED BY 'SIMPLY EXIT SIGNS (#SE-1980)' OR EQUAL COMPLYING WITH ICC/ANSI A117.1 SECTION 703.1 AND IBC 1013 & SECTION 1111, ADJACENT TO EACH DOOR TO AN EXIT PASSAGEWAY AND THE EXIT DISCHARGE.

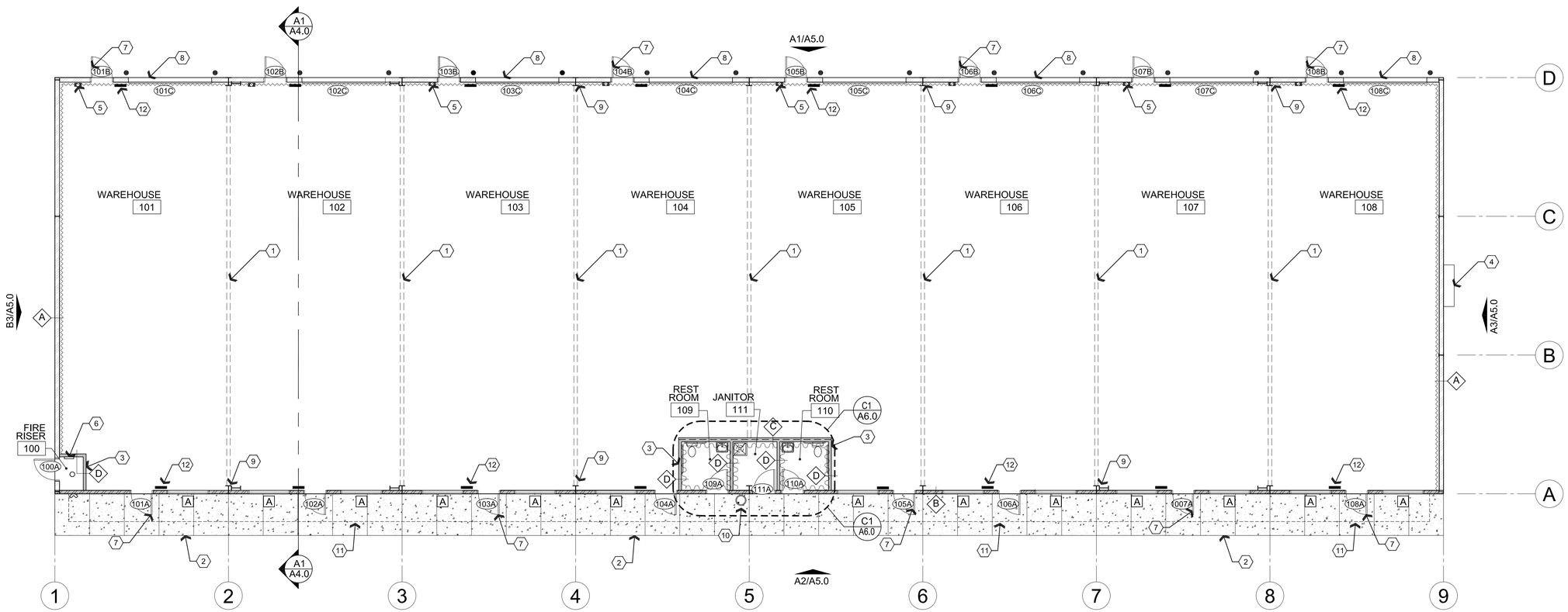

A1 Reference / Wall Types Floor Plan

Scale: 1/8"=1'-0"

Plan North

REVISIONS	BY
1 City of Prescott Comments 10/08/2024	LO

These drawings are the property of W. Alan Kenson & Associates P.C., and may not be reproduced in any way without the written consent of W. Alan Kenson & Associates, P.C.

REGISTERED ARCHITECT CERTIFICATE NO. 25646 W. ALAN KENSON Date Signed 07/31/24 ARIZONA U.S.A. EXPIRES: 6/30/27

W. Alan Kenson & Associates, P.C.
P 928-443-5812
F 928-443-5815
P.O. Box 11593
Prescott, AZ 86304
email: waka@cableone.net
www.kenson-associates.com
ARCHITECTURE & PLANNING

DRAWING: Reference / Wall Types Floor Plan

PROJECT: JSC Contracting Building B
6601 Inter Cal Way
Prescott, AZ 86301

APN: 103-50-054D

CNPLANS_B2407-176 6601 INTER CAL WAY PLANS

DRAWN BY	L.O.
CHECKED BY	W.A.K.
DATE	July 31st, 2024
JOB NO.	799
SHEET	A1.0

Oct 21, 2024 - 1:21pm

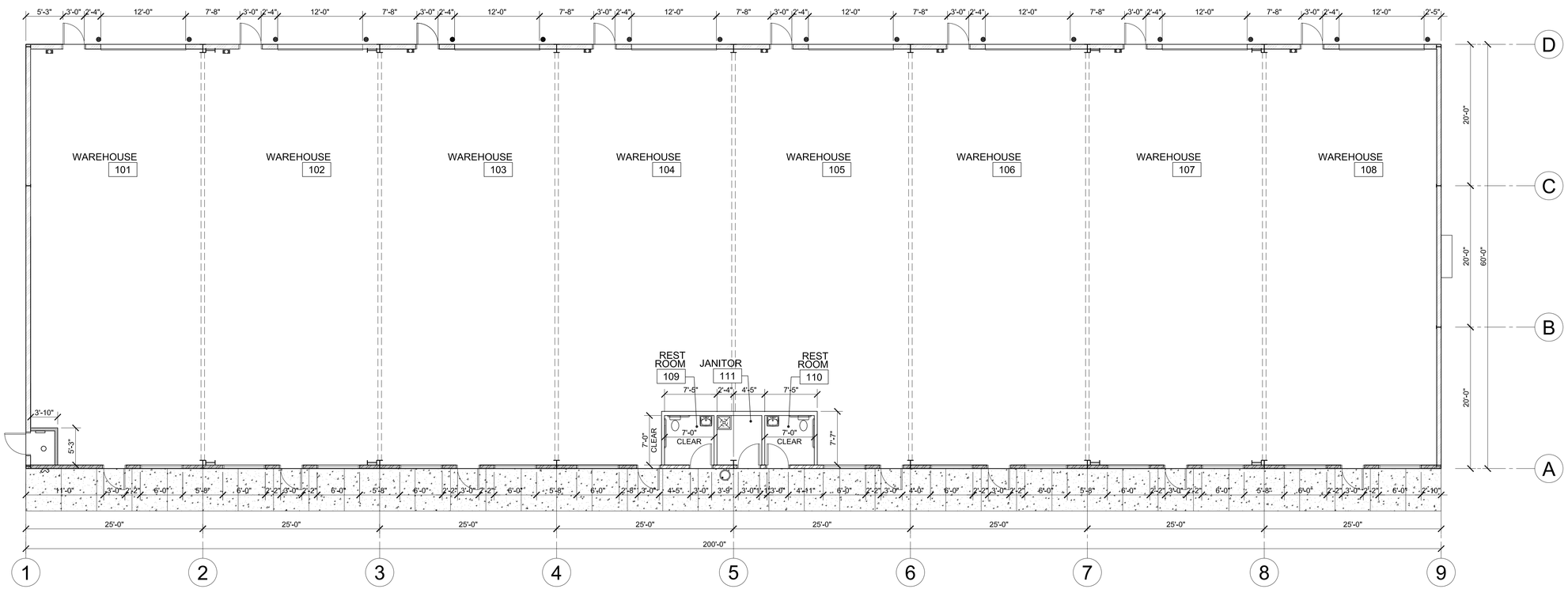

A1 Dimension Floor Plan

Scale: 1/8"=1'-0"

Plan North

REVISIONS	BY

These drawings are the property of W. Alan Kenson & Associates P.C., and may not be reproduced in any way without the written consent of W. Alan Kenson & Associates, P.C.

REGISTERED ARCHITECT CERTIFICATE NO. 25646 W. ALAN KENSON Date Signed 07/31/24 ARIZONA U.S.A.

EXPIRES: 6/30/27

W. Alan Kenson & Associates, P.C.
P 928-443-5812
F 928-443-5815
P.O. Box 11593
Prescott, AZ 86304
email: waka@cableone.net
www.kenson-associates.com
ARCHITECTURE & PLANNING

DRAWING: Dimension Floor Plan

PROJECT: JSC Contracting Building B
6601 Inter Cal Way
Prescott, AZ 86301

APN: 103-50-054D

CNPLANS_B2407-176 6601 INTER CAL WAY PLANS

DRAWN BY	L.O.
CHECKED BY	W.A.K.
DATE	July 31st, 2024
JOB NO.	799
SHEET	A1.1

Oct 21, 2024 - 1:39pm

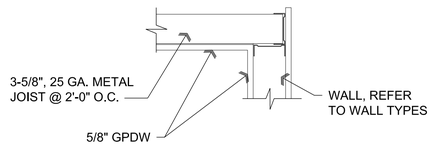

A2 Ceiling Framing Detail

Scale: 1 1/2" = 1'-0"

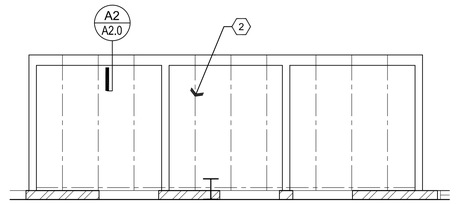

B2 Partial Ceiling Framing Plan

Scale: 1/4"=1'-0"

Legend

- GPDW CEILING
- LED CAN LIGHT
- EMERGENCY EXIT SIGN WITH BATTERY BACK UP
- STRIP LIGHT FIXTURE
- EXHAUST FAN
- WALL MOUNTED LIGHT FIXTURE
- UNIT HEATER

Descriptive Keynotes

1. LIGHT FIXTURE(S) SHOWN FOR QUANTITY AND LOCATION ONLY. REFER TO ELECTRICAL PLANS.
2. PROVIDE 5/8" GPDW CEILING ATTACHED TO 3⅝", 25 GAUGE, METAL JOISTS @ 2'-0" O.C.
3. EXHAUST FAN, REFER TO MECHANICAL PLANS, TYPICAL.
4. PROVIDE UNIT HEATER, REFER TO MECHANICAL PLANS.
5. ROOF PURLIN, REFER TO STRUCTURAL PLANS.

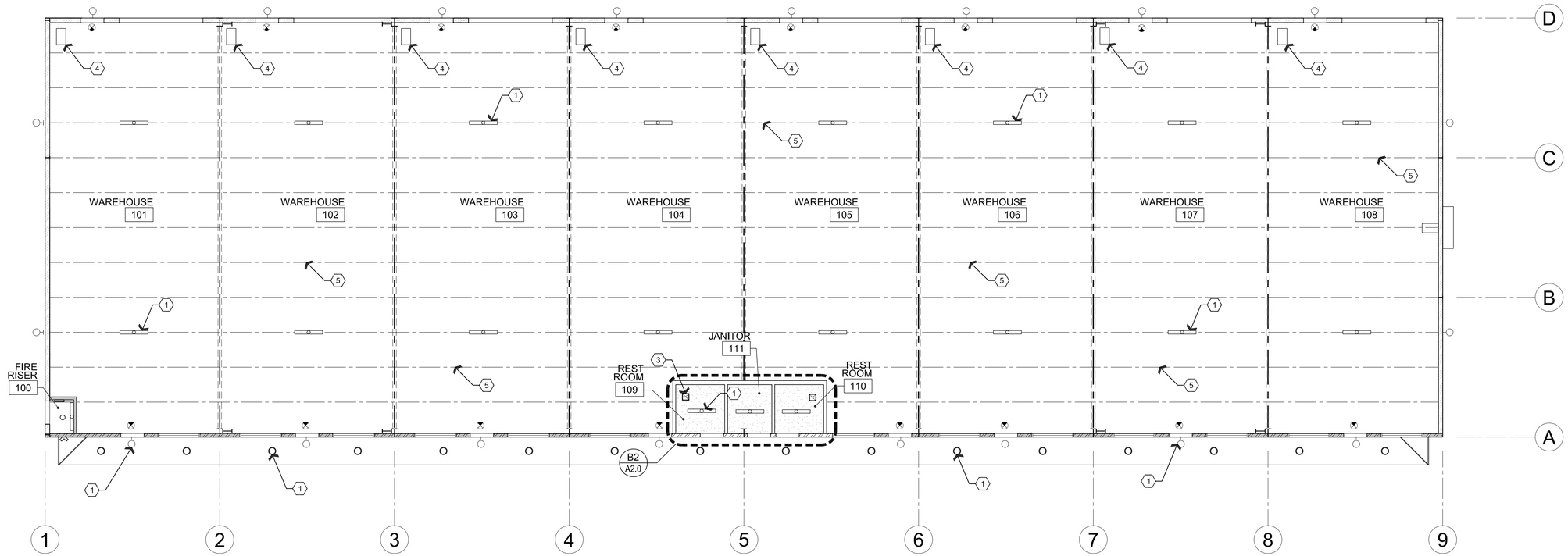

A1 Reflected Ceiling Plan

Scale: 1/8"=1'-0"

Plan North

REVISIONS	BY

These drawings are the property of W. Alan Kenson & Associates P.C., and may not be reproduced in any way without the written consent of W. Alan Kenson & Associates, P.C.

REGISTERED ARCHITECT
CERTIFICATE NO. 25646
W. ALAN KENSON
Date Signed 07/31/24
ARIZONA U.S.A.
EXPIRES: 6/30/27

W. Alan Kenson & Associates, P.C.
P 928-443-5812
F 928-443-5815
P.O. Box 11593
Prescott, AZ 86304
email: waka@cableone.net
www.kenson-associates.com
ARCHITECTURE & PLANNING

DRAWING: Reflected Ceiling Plan

PROJECT: JSC Contracting Building B
6601 Inter Cal Way
Prescott, AZ 86301

APN: 103-50-054D

CNPLANS_B2407-176 6601 INTER CAL WAY PLANS

DRAWN BY	L.O.
CHECKED BY	W.A.K.
DATE	July 31st, 2024
JOB NO.	799
SHEET	A2.0

Jul 31, 2024 - 9:00am

Roof Drain Leader Sizes:

ROOF AREA : 11,788

4" RAINFALL = .0416 GPM

.0416 x 11,788 = 490 GPM

490 / 192 (3-1/2"x4")= 2.55

3-1/2" x 4" DOWNSPOUTS = 3 LEADERS REQUIRED
5 LEADERS PROVIDED

3" x 5" GUTTER REQUIRED WITH 1/2" SLOPE (225 GPM)
*PER 2018 IPC SECTION 1106 (TABLE 1106.3 &1106.6)

Descriptive Keynotes

1. PROVIDE 24 GAUGE GALVALUME STANDING SEAM SHEET METAL ROOF PANELS, REFER TO MATERIALS SCHEDULE. M-2
2. PROVIDE SHEET METAL GUTTER, REFER TO MATERIALS SCHEDULE. M-5
3. PROVIDE DOWNSPOUT, TYPICAL OF 5, REFER TO MATERIALS SCHEDULE. M-4
4. PROVIDE LOKSEAM' METAL AWNING SYSTEM, REFER TO STRUCTURAL PLANS AND MATERIALS SCHEDULE. M-3

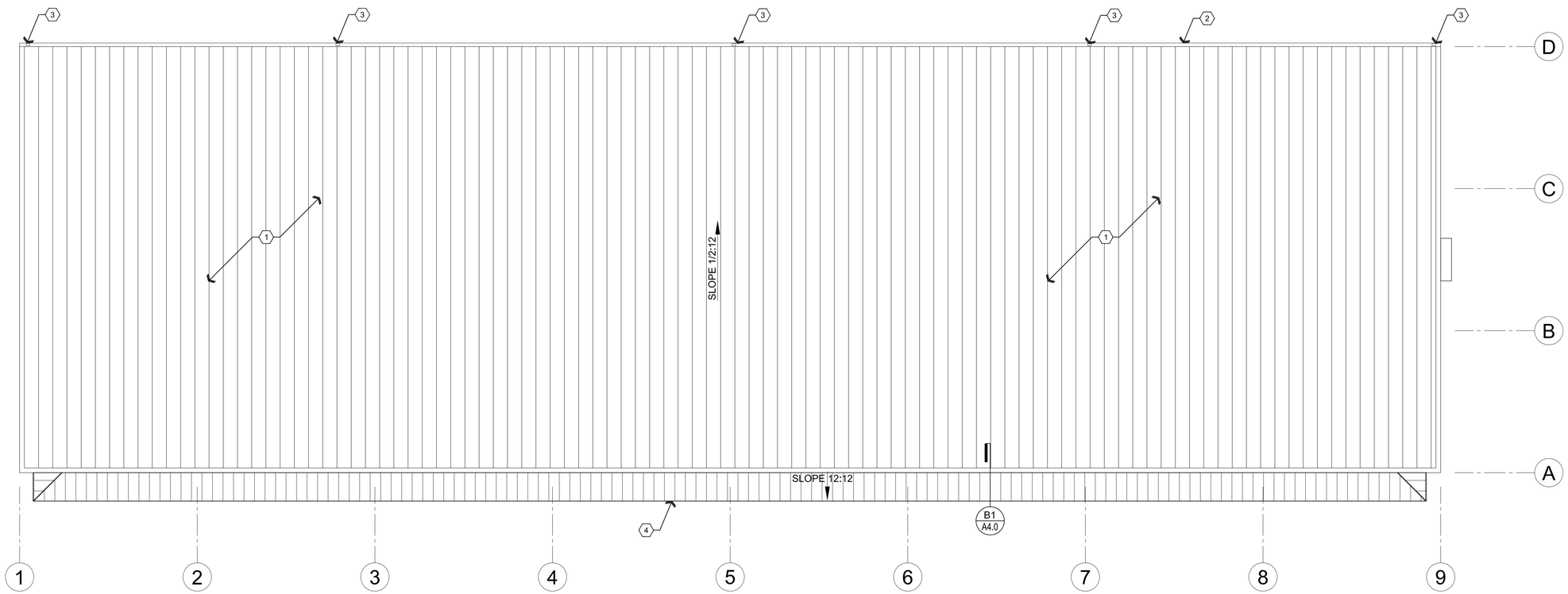

A1 Roof Plan

Scale: 1/8"=1'-0"

Plan North

Jul 31, 2024 - 9:00am

REVISIONS	BY

These drawings are the property of W. Alan Kenson & Associates P.C., and may not be reproduced in any way without the written consent of W. Alan Kenson & Associates, P.C.

REGISTERED ARCHITECT
CERTIFICATE NO. 25646
W. ALAN KENSON
Date Signed 07/31/24
ARIZONA U.S.A.
EXPIRES: 6/30/27

W. Alan Kenson & Associates, P.C.
P.O. Box 11593
Prescott, AZ 86304
P 928-443-5812
F 928-443-5815
email: waka@cableone.net
www.kenson-associates.com
ARCHITECTURE & PLANNING

DRAWING: Roof Plan

PROJECT: JSC Contracting Building B
6601 Inter Cal Way
Prescott, AZ 86301

APN: 103-50-054D

CNPLANS_B2407-176 6601 INTER CAL WAY PLANS

DRAWN BY	L.O.
CHECKED BY	W.A.K.
DATE	July 31st, 2024
JOB NO.	799
SHEET	A3.0

Descriptive Keynotes

1. PROVIDE CONCRETE FOOTING. REFER TO STRUCTURAL PLANS.
2. PROVIDE CONCRETE SLAB, REFER TO STRUCTURAL PLANS.
3. PROVIDE STEEL COLUMN, REFER TO STRUCTURAL PLANS.
4. PROVIDE STEEL BEAM, REFER TO STRUCTURAL PLANS.
5. PROVIDE ROOF PURLIN, TYPICAL. REFER TO STRUCTURAL PLANS.
6. PROVIDE STRUCTURAL FRAMING FOR AWNING SYSTEM. REFER TO STRUCTURAL PLANS.
7. PROVIDE R-19 UNFACED BATT INSULATION.
8. PROVIDE R-30 (9") PROLINER™ SYSTEM (WHITE) (1)
9. EXTERIOR WALL, REFER TO WALL TYPES PLAN FOR TYPE OF CONSTRUCTION.
10. PROVIDE 24 GAUGE GALVALUME STANDING SEAM SHEET METAL ROOF PANELS.
11. PROVIDE ARTISAN SERIES PANELS AT METAL SOFFIT SYSTEM, REFER TO MATERIALS SCHEDULE. M-9
12. PROVIDE METAL ROOF PANEL AT METAL AWNING SYSTEM, REFER TO MATERIALS SCHEDULE. M-3
13. PROVIDE SHEET METAL WALL TO ROOF FLASHING.
14. PROVIDE SHEET METAL PARAPET CAP, REFER TO MATERIALS SCHEDULE. M-6
15. PROVIDE SHEET METAL GUTTER, REFER TO MATERIALS SCHEDULE. M-5
16. PROVIDE SHEET METAL DOWNSPOUT, REFER TO MATERIALS SCHEDULE. M-4
17. PROVIDE 26 GAUGE "PBA" METAL BUILDING SIDE PANEL, REFER TO MATERIALS SCHEDULE. M-1
18. PROVIDE STEEL GIRT, TYPICAL. REFER TO STRUCTURAL PLANS.
19. CUT FLANGES AND PLACE BEHIND VERTICAL.
20. CONTINUOUS LIGHT GAUGE STEEL TRACK, REFER TO STRUCTURAL PLANS.
21. STEEL STUD WALL. REFER TO WALL TYPES PLAN.
22. PROVIDE PBR SHEET METAL LINER PANEL ON INSIDE OF PARAPET.
23. PROVIDE 8'-0" TALL PBR SHEET METAL LINER PANEL. REFER TO MATERIALS SCHEDULE. M-8
24. R-38 (12") LONG TAB BANDED SYS FACED W/ VRR+, 2@12" DOUBLE SEAL TAB(S) (1)
25. NOT USED.
26. PROVIDE 2' OF 2" SLAB INSULATION. (1)

Air Barrier

NOTE:
PROVIDE AN AIR BARRIER PER THE 2012 IECC SECTION C402.4.1

1. AIR LEAKAGE - THE CODE ALLOWS THE USE OF AIRFLOW RETARDERS (HOUSE WRAPS) OR OTHER SOLID MATERIALS AS ACCEPTABLE METHODS TO MEET THIS REQUIREMENT. TO BE EFFECTIVE, THE BUILDING THERMAL SEAL MUST BE:
- IMPERMEABLE TO AIR FLOW.
- CONTINUOUS OVER THE ENTIRE BUILDING ENVELOPE.
- ABLE TO WITHSTAND THE FORCES THAT MAY ACT ON IT DURING AND AFTER CONSTRUCTION.
- DURABLE OVER THE EXPECTED LIFETIME OF THE BUILDING.
- ALL SEAMS AND EDGES MUST BE SEALED/TAPED PER MANUFACTURER'S SPECIFICATIONS.

2. BUILDING THERMAL ENVELOPE - THE SEALING METHODS BETWEEN DISSIMILAR MATERIALS SHALL ALLOW FOR DIFFERENTIAL EXPANSION AND CONTRACTION. THE FOLLOWING SHALL BE CAULKED, GASKETED, WEATHER-STRIPPED OR OTHERWISE SEALED WITH AN AIR BARRIER MATERIAL, SUITABLE FILM OR SOLID MATERIAL:
- ALL JOINTS, SEAMS AND PENETRATIONS.
- SITE BUILT WINDOWS, DOORS AND SKYLIGHTS.
- OPENINGS BETWEEN WINDOW AND DOOR ASSEMBLIES AND THEIR RESPECTIVE JAMBS AND FRAMING.
- UTILITY PENETRATIONS.
- DROPPED CEILINGS OR CHASES ADJACENT TO THE THERMAL ENVELOPE.
- KNEE WALLS.
- WALLS AND CEILINGS SEPARATING A GARAGE FROM CONDITIONED SPACES.
- BEHIND TUBS AND SHOWERS ON EXTERIOR WALLS.
- COMMON WALLS BETWEEN DWELLING UNITS.
- OTHER SOURCES OF INFILTRATION.

3. FENESTRATION AIR LEAKAGE - WINDOW, SKYLIGHT AND SLIDING GLASS DOORS SHALL HAVE AN AIR INFILTRATION RATE OF NO MORE THAN 0.3 CFM PER SQUARE FOOT, AND SWINGING DOORS NO MORE THAN 0.5 CFM. SPECIFICATION SHALL BE LISTED ON THE MANUFACTURER LABEL.

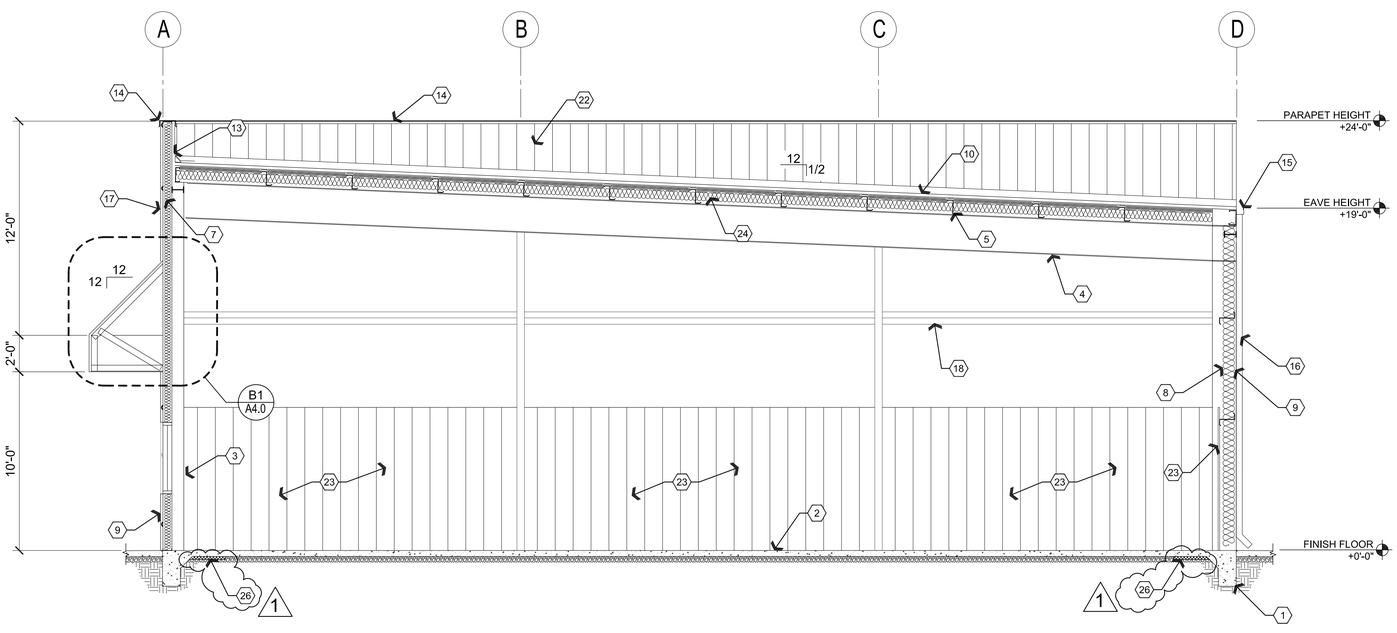

A1 Building Section
Scale: 1/4"=1'-0"

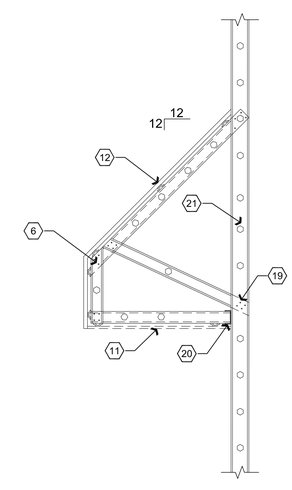

B1 Awning at Stud Wall
Scale: 1/2"=1'-0"

REVISIONS	BY
1 City of Prescott Comments 10/08/2024	LO

These drawings are the property of W. Alan Kenson & Associates P.C., and may not be reproduced in any way without the written consent of W. Alan Kenson & Associates, P.C.

REGISTERED ARCHITECT CERTIFICATE NO. 25646 W. ALAN KENSON Date Signed 07/31/24 ARIZONA U.S.A. EXPIRES: 6/30/27

W. Alan Kenson & Associates, P.C.
P.O. Box 11593
Prescott, AZ 86304
P 928-443-5812
F 928-443-5815
email: waka@cableone.net
www.kenson-associates.com
ARCHITECTURE & PLANNING

DRAWING: Building Sections
PROJECT: JSC Contracting Building B, 6601 Inter Cal Way, Prescott, AZ 86301
APN: 103-50-054D
CNPLANS B2407-176 6601 INTER CAL WAY PLANS

DRAWN BY: L.O.
CHECKED BY: W.A.K.
DATE: July 31st, 2024
JOB NO.: 799
SHEET: A4.0

Oct 21, 2024 - 1:21pm

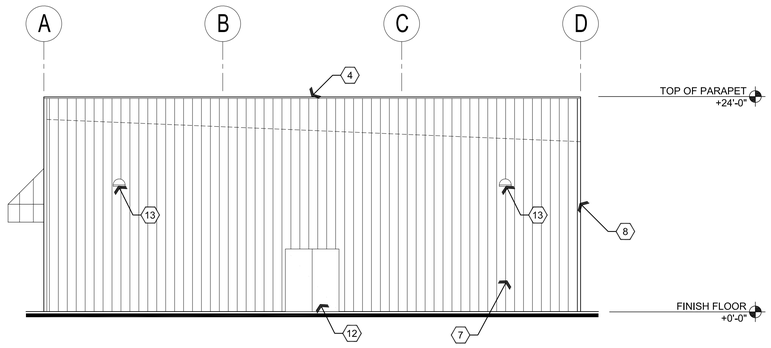

A3 Proposed Elevation

Scale: 1/8"=1'-0"

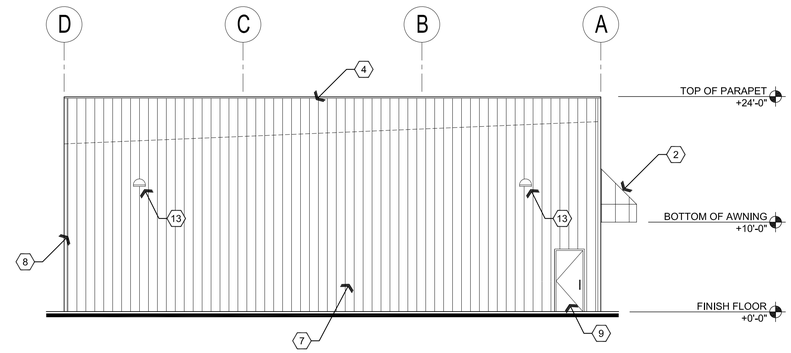

B3 Proposed Elevation

Scale: 1/8"=1'-0"

Descriptive Keynotes

1. PROVIDE 24 GAUGE GALVALUME STANDING SEAM SHEET METAL ROOF PANELS, REFER TO MATERIALS SCHEDULE. M-2
2. PROVIDE 24 GAUGE SIGNATURE 200 LOKSEAM 1'-6" METAL ROOF PANEL AT METAL AWNING SYSTEM, REFER TO MATERIALS SCHEDULE. M-3
3. PROVIDE SHEET METAL WALL TO ROOF FLASHING.
4. PROVIDE SHEET METAL PARAPET CAP, REFER TO MATERIALS SCHEDULE. M-6
5. PROVIDE SHEET METAL GUTTER, REFER TO MATERIALS SCHEDULE. M-5
6. PROVIDE SHEET METAL DOWNSPOUT, REFER TO MATERIALS SCHEDULE. M-4
7. PROVIDE 26 GAUGE "PBA" METAL BUILDING SIDING PANEL, REFER TO MATERIALS SCHEDULE. M-1
8. PROVIDE METAL BUILDING TRIM, REFER TO MATERIALS SCHEDULE. M-10
9. PROVIDE DOOR, REFER TO REFERENCE FLOOR PLAN AND DOOR SCHEDULE.
10. PROVIDE ROLL-UP DOOR, REFER TO REFERENCE FLOOR PLAN AND DOOR SCHEDULE.
11. PROVIDE WINDOW, REFER TO REFERENCE FLOOR PLAN AND WINDOW TYPES.
12. ELECTRICAL SERVICE ENTRANCE SECTION, REFER TO ELECTRICAL PLANS.
13. EXTERIOR LIGHTING, REFER TO ELECTRICAL PLANS.
14. PROVIDE 6" ADDRESS NUMBERS WITH A CONTRASTING BACKGROUND, TO BE CLEARLY VISIBLE FROM THE STREET.

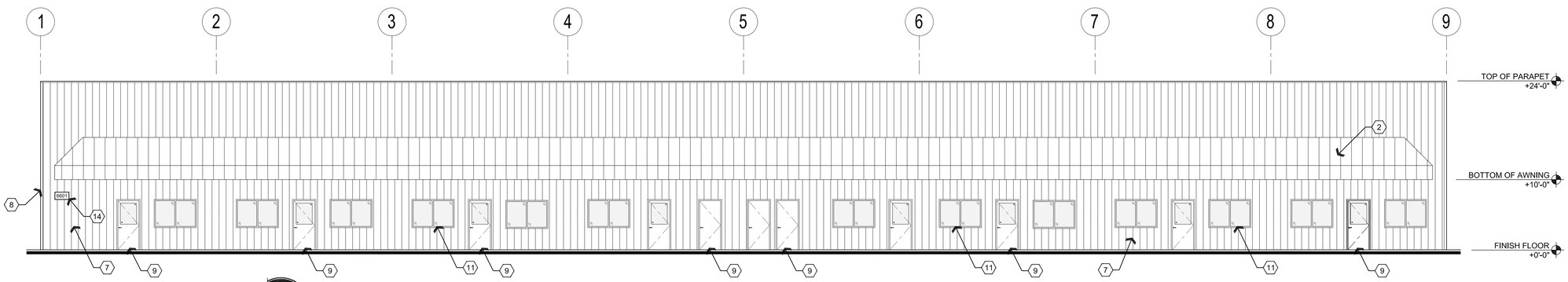

A2 Proposed Elevation

Scale: 1/8"=1'-0"

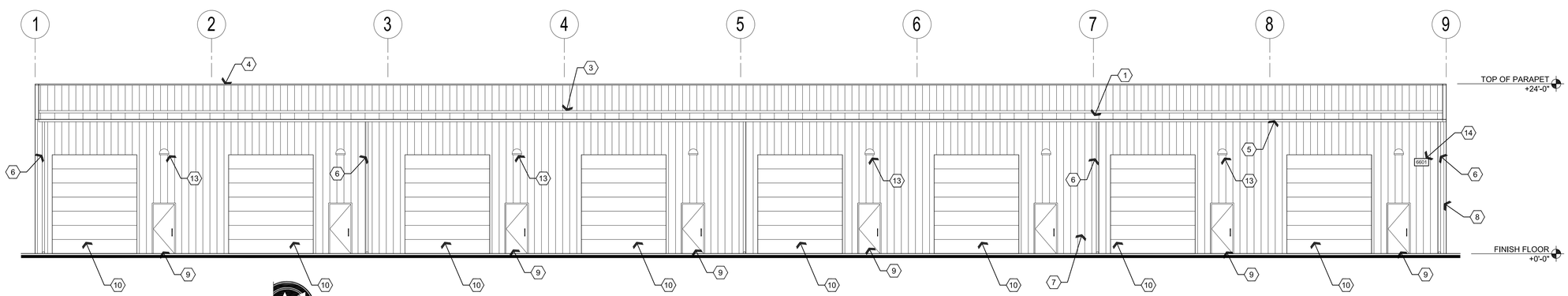

A1 Proposed Elevation

Scale: 1/8"=1'-0"

Jul 31, 2024 - 9:01am

REVISIONS	BY

These drawings are the property of W. Alan Kenson & Associates P.C., and may not be reproduced in any way without the written consent of W. Alan Kenson & Associates, P.C.

REGISTERED ARCHITECT CERTIFICATE NO. 25646 W. ALAN KENSON ARIZONA Date Signed 07/31/24 EXPIRES: 6/30/27

W. Alan Kenson & Associates, P.C.
P 928-443-5812
F 928-443-5815
P.O. Box 11593
Prescott, AZ 86304
email: waka@cableone.net
www.kenson-associates.com
ARCHITECTURE & PLANNING

DRAWING: Exterior Elevations

PROJECT: JSC Contracting Building B
6601 Inter Cal Way
Prescott, AZ 86301

APN: 103-50-054D

CNPLANS_B2407-176 6601 INTER CAL WAY PLANS

DRAWN BY	L.O.
CHECKED BY	W.A.K.
DATE	July 31st, 2024
JOB NO.	799
SHEET	A5.0

Toilet Accessory Schedule

CODE	FIXTURE	DESCRIPTION	MANUFACTURER	MODEL	COLOR
TA-1	HAND SOAP DISPENSER	COUNTER MOUNTED	BOBRICK	B8221	BRIGHT POLISHED
TA-2	PAPER TOWEL DISPENSER	RECESSED W/ TRASH	BOBRICK	B-3944	STAINLESS STEEL
TA-3	GRAB BARS 42", 36", 18"	1 1/4" DIAMETER	BOBRICK	B-5806	STAINLESS STEEL
TA-4	TOILET SEAT COVER DISPENSER	HALF FOLD	BOBRICK	B-221	STAINLESS STEEL
TA-5	TOILET PAPER DISPENSER (SINGLE USER RR)	SINGLE 10" JUMBO	BOBRICK	B-2890	STAINLESS STEEL

Descriptive Keynotes

1. PROVIDE 1-1/2" DIAMETER GRAB BARS PER A.D.A. REQUIREMENTS, 42" LONG AT SIDE OF WATER CLOSET / 36" LONG AT REAR OF WATER CLOSET / 18" VERTICAL GRAB BAR, PROVIDE SOLID BLOCKING, REFER TO TOILET ACCESSORY SCHEDULE. TA-3
2. PROVIDE PAPER TOWEL DISPENSER, REFER TO TOILET ACCESSORY SCHEDULE. TA-2
3. PROVIDE FLOOR MOUNTED WATER CLOSET, REFER TO PLUMBING DRAWINGS.
4. PROVIDE WALL HUNG LAVATORY, INSULATE PIPES, REFER TO PLUMBING DRAWINGS.
5. PROVIDE ACCESSIBILITY SIGNAGE MOUNTED PER A.D.A. REQUIREMENTS.
6. PROVIDE 1/4" PLATE MIRROR.
7. PROVIDE SURFACE MOUNTED HAND SOAP DISPENSER, REFER TO TOILET ACCESSORY SCHEDULE. TA-1
8. PROVIDE SURFACE MOUNTED TOILET SEAT COVER DISPENSER, REFER TO TOILET ACCESSORY SCHEDULE. TA-4
9. PROVIDE TOILET PAPER DISPENSER, REFER TO TOILET ACCESSORY SCHEDULE. TA-5
10. MOP SINK, REFER TO PLUMBING PLANS.
11. FRP WAINSCOT, 4' HIGH. FRP-1
12. PROVIDE A.D.A ACCESSIBLE ELECTRIC DRINKING FOUNTAIN, MAXIMUM HEIGHT OF SPOUT OUTLET TO BE 36" FROM FLOOR. REFER TO PLUMBING PLAN.

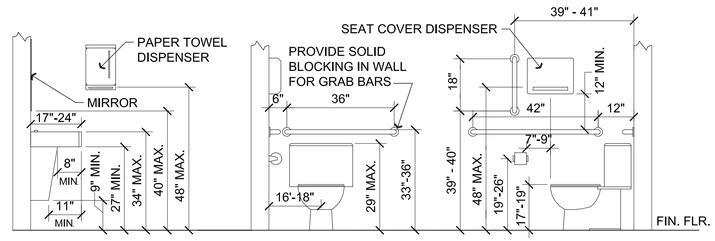

C3 Typical Fixture Mounting Heights

Scale: 1/2"=1'-0"

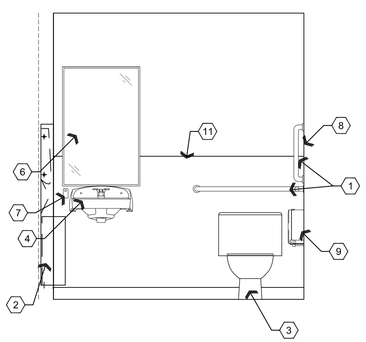

A1 Elevation

Scale: 1/2"=1'-0"

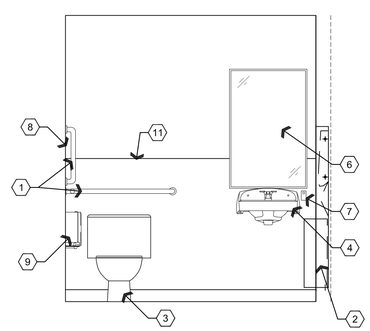

B1 Elevation

Scale: 1/2"=1'-0"

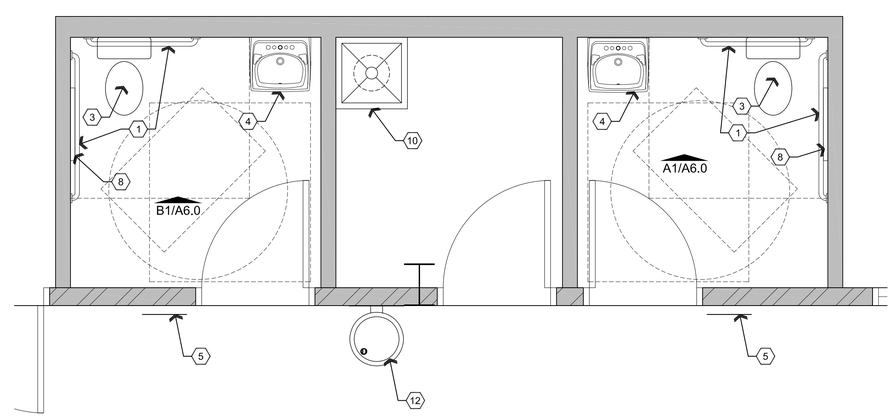

C1 Enlarged Plan

Scale: 1/2"=1'-0"

Plan North

REVISIONS	BY

These drawings are the property of W. Alan Kenson & Associates P.C., and may not be reproduced in any way without the written consent of W. Alan Kenson & Associates, P.C.

REGISTERED ARCHITECT CERTIFICATE NO. 25646 W. ALAN KENSON Date Signed 07/31/24 ARIZONA U.S.A. EXPIRES: 6/30/27

W. Alan Kenson & Associates, P.C.
P 928-443-5812
F 928-443-5815
P.O. Box 11593
Prescott, AZ 86304
email: waka@cableone.net
www.kenson-associates.com
ARCHITECTURE & PLANNING

DRAWING: Enlarged Plans and Interior Elevations

PROJECT: JSC Contracting Building B
6601 Inter Cal Way
Prescott, AZ 86301

APN: 103-50-054D

CNPLANS_B2407-176 6601 INTER CAL WAY PLANS

DRAWN BY	L.O.
CHECKED BY	W.A.K.
DATE	July 31st, 2024
JOB NO.	799
SHEET	A6.0

Jul 31, 2024 - 9:02am

Door Hardware Schedule

HARDWARE SET A:
STOREROOM

HARDWARE SET B:
ENTRANCE

HARDWARE SET C:
ENTRANCE / PRIVACY

Door Schedule

NO.	ROOM NAME	SIZE	TYPE	DOOR MATERIAL	DOOR FINISH	FRAME MATERIAL	FRAME FINISH	HARDWARE TYPE
100A	FIRE RISER	3'-0"x7'-0"	A	HM	PAINT	HM	PAINT	A
101A	WAREHOUSE	3'-0"x7'-0"	B	HM / GLASS	PAINT	HM	PAINT	B
101B	WAREHOUSE	3'-0"x7'-0"	A	HM	PAINT	HM	PAINT	B
101C	WAREHOUSE	12'-0"x14'-0"	C	STEEL	PAINT	STEEL	PAINT	-
102A	WAREHOUSE	3'-0"x7'-0"	B	HM / GLASS	PAINT	HM	PAINT	B
102B	WAREHOUSE	3'-0"x7'-0"	A	HM	PAINT	HM	PAINT	B
102C	WAREHOUSE	12'-0"x14'-0"	C	STEEL	PAINT	STEEL	PAINT	-
103A	WAREHOUSE	3'-0"x7'-0"	B	HM / GLASS	PAINT	HM	PAINT	B
103B	WAREHOUSE	3'-0"x7'-0"	A	HM	PAINT	HM	PAINT	B
103C	WAREHOUSE	12'-0"x14'-0"	C	STEEL	PAINT	STEEL	PAINT	-
104A	WAREHOUSE	3'-0"x7'-0"	B	HM / GLASS	PAINT	HM	PAINT	B
104B	WAREHOUSE	3'-0"x7'-0"	A	HM	PAINT	HM	PAINT	B
104C	WAREHOUSE	12'-0"x14'-0"	C	STEEL	PAINT	STEEL	PAINT	-
105A	WAREHOUSE	3'-0"x7'-0"	B	HM / GLASS	PAINT	HM	PAINT	B
105B	WAREHOUSE	3'-0"x7'-0"	A	HM	PAINT	HM	PAINT	B
105C	WAREHOUSE	12'-0"x14'-0"	C	STEEL	PAINT	STEEL	PAINT	-
106A	WAREHOUSE	3'-0"x7'-0"	B	HM / GLASS	PAINT	HM	PAINT	B
106B	WAREHOUSE	3'-0"x7'-0"	A	HM	PAINT	HM	PAINT	B
106C	WAREHOUSE	12'-0"x14'-0"	C	STEEL	PAINT	STEEL	PAINT	-
107A	WAREHOUSE	3'-0"x7'-0"	B	HM / GLASS	PAINT	HM	PAINT	B
107B	WAREHOUSE	3'-0"x7'-0"	A	HM	PAINT	HM	PAINT	B
107C	WAREHOUSE	12'-0"x14'-0"	C	STEEL	PAINT	STEEL	PAINT	-
108A	WAREHOUSE	3'-0"x7'-0"	B	HM / GLASS	PAINT	HM	PAINT	B
108B	WAREHOUSE	3'-0"x7'-0"	A	HM	PAINT	HM	PAINT	B
108C	WAREHOUSE	12'-0"x14'-0"	C	STEEL	PAINT	STEEL	PAINT	-
109A	RESTROOM	3'-0"x7'-0"	D	HM / GLASS	PAINT	HM	PAINT	C
110A	RESTROOM	3'-0"x7'-0"	A	HM	PAINT	HM	PAINT	C
111A	JANITOR	12'-0"x14'-0"	F	STEEL	PAINT	STEEL	PAINT	A

NOTES:

1. ALL EXIT DOORS & HARDWARE SHALL COMPLY WITH THE 2018 I.B.C. AND I.F.C.
2. DOOR THRESHOLDS SHALL HAVE A MAX HEIGHT OF 1/2" FOR H.C. ACCESSIBILITY. THRESHOLD SHALL HAVE A MAXIMUM RISE OF 1/4" AND 1/2" RISE WHEN BEVELED WITH MAXIMUM 1:2 SLOPE.
3. ALL GLAZING IN DOORS SHALL BE SAFETY GLAZING.
4. ALL INTERIOR DOORS SHALL BE OPERABLE FOR EMERGENCY EXITING PURPOSES WITHOUT THE USE OF A KEY, SPECIAL KNOWLEDGE NOR EFFORT.
5. ALL GLAZING WITHIN 24" OF OPENINGS SHALL BE SAFETY GLASS.
6. IF A DOOR HAS A CLOSER, THEN THE SWEEP PERIOD OF THE CLOSER SHALL BE ADJUSTED SO THAT FROM AN OPEN POSITION OF 70 DEGREES, THE DOOR WILL TAKE AT LEAST 3 SECONDS TO MOVE TO A POINT 3" FROM THE LATCH, MEASURED TO THE LEADING EDGE OF THE DOOR.
7. DOOR HANDLES, PULLS, LATCHES, LOCKS, AND OTHER OPERATING DEVICES ON ACCESSIBLE DOORS SHALL HAVE A SHAPE THAT IS EASY TO GRASP WITH ONE HAND AND DOES NOT REQUIRE TIGHT GRASPING, TIGHT PINCHING, OR TWISTING OF THE WRIST TO OPERATE. HARDWARE REQUIRED FOR DOOR PASSAGE SHALL BE MOUNTED NO HIGHER THAN 48" ABOVE FINISH FLOOR.
8. DOOR OPENING FORCE SHALL BE: 5lbf MAX INTERIOR HINGED, SLIDING OR FOLDING DOORS; FIRE DOORS SHALL HAVE THE MINIMUM OPENING FORCE ALLOWABLE BY THE APPROPRIATE ADMINISTRATIVE AUTHORITY.

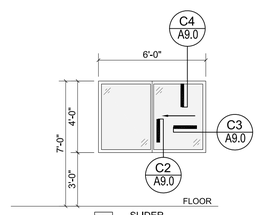

A SLIDER DUAL-PANE, LOW E

B2 Window Types

Scale: 1/4"=1'-0"

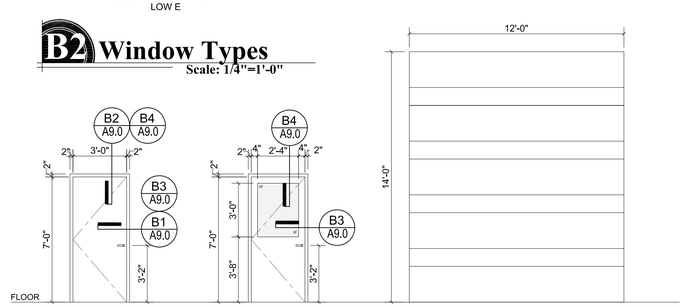

A 18 GAUGE HOLLOW METAL DOOR WITH 16 GAUGE HOLLOW METAL FRAME

B 18 GAUGE HOLLOW METAL DOOR WITH 16 GAUGE HOLLOW METAL FRAME WITH CLEAR SAFETY GLASS

C INSULATED CHAIN HOISTED OVERHEAD DOOR

B1 Door Types

Scale: 1/4"=1'-0"

REVISIONS	BY

These drawings are the property of W. Alan Kenson & Associates P.C., and may not be reproduced in any way without the written consent of W. Alan Kenson & Associates, P.C.

REGISTERED ARCHITECT
CERTIFICATE NO. 25646
W. ALAN KENSON
Date Signed 07/31/24
ARIZONA U.S.A.
EXPIRES: 6/30/27

W. Alan Kenson & Associates, P.C.
P 928-443-5812
F 928-443-5815
P.O. Box 11593
Prescott, AZ 86304
email: waka@cableone.net
www.kenson-associates.com
ARCHITECTURE & PLANNING

DRAWING: Door Schedule and Door & Window Types

PROJECT: JSC Contracting Building B
6601 Inter Cal Way
Prescott, AZ 86301

APN: 103-50-054D

CNPLANS_B2407-176 6601 INTER CAL WAY PLANS

DRAWN BY	L.O.
CHECKED BY	W.A.K.
DATE	July 31st, 2024
JOB NO.	799
SHEET	A7.0

Oct 21, 2024 - 1:42pm

Materials schedule XX-

CODE	MATERIAL	LOCATION	MANUFACTURER	SPECIFICATION
FRP-1	FIBERGLASS REINFORCED PLASTIC	JANITOR & EXTERIOR ENTRANCE RESTROOMS		GRAY, 4' TALL WAINSCOT
M-1	METAL SIDING PANEL	EXTERIOR	MBCI	PBA PANEL 26 GAUGE, PRE PAINTED, KOKO BROWN (SIGNATURE 200)
M-2	METAL ROOF PANEL	MAIN ROOF	MBCI	24" ULTRADEK, 24 GAUGE, STANDING SEAM, GALVALUME
M-3	METAL ROOF PANEL	AWNING ROOF	MBCI	26 GAUGE LOKSEAM 12" STANDING SEAM, SLATE GRAY (SIGNATURE 300)
M-4	SHEET METAL DOWNSPOUT	EAST EXTERIOR	MBCI	3-1/2" x4" BOX DOWNSPOUT, 26 GAUGE, PRE-PAINTED, KOKO BROWN (SIGNATURE 200)
M-5	SHEET METAL GUTTER	EAST EXTERIOR	MBCI	3"x5" BOX GUTTER, 26 GAUGE, PRE-PAINTED KOKO BROWN (SIGNATURE 200)
M-6	METAL PARAPET CAP	NORTH, SOUTH AND WEST EXTERIOR	MBCI	26 GAUGE, PRE-PAINTED, KOKO BROWN (SIGNATURE 200)
M-7	EXTERIOR METAL PANEL LINER	INTERIOR OF PARAPETS	MBCI	PBR PANEL 26 GAUGE PRE-PAINTED, KOKO BROWN (SIGNATURE 200)
M-8	INTERIOR METAL LINER PANEL	INTERIOR AS SHOWN ON PLAN UP TO 8'-0" A.F.F.	MBCI	PBR PANEL 26 GAUGE, PRE-PAINTED, POLAR WHITE (SIGNATURE 200)
M-9	METAL SOFFIT SYSTEM	AWNING SOFFIT	MBCI	ARTISAN SERIES 12" WIDE 26 GAUGE SLATE GRAY(SIGNATURE 300)
M-10	METAL TRIM	EXTERIOR	MBCI	26 GAUGE PRE-PAINTED KOKO BROWN (SIGNATURE 200)
OD-1	OVERHEAD DOOR	WAREHOUSE BAYS	C.H.I.	INSULATED RIBBED STEEL OVERHEAD DOOR WITH CHAIN HOIST MODEL # 3241
PT-1	PAINT	GPDW WALLS AND CEILINGS	SHERWIN WILLIAMS	PASSIVE SW7064

Room Finish Schedule

NO.	ROOM NAME	FLOOR	BASE	WALLS	CEILING	HEIGHT
100	FIRE RISER	F1	B1	W1	C1	VARIES
101	WAREHOUSE	F1	B1	W1	C1	VARIES
102	WAREHOUSE	F1	B1	W1	C1	VARIES
103	WAREHOUSE	F1	B1	W1	C1	VARIES
104	WAREHOUSE	F1	B1	W1	C1	VARIES
105	WAREHOUSE	F1	B1	W1	C1	VARIES
106	WAREHOUSE	F1	B1	W1	C1	VARIES
107	WAREHOUSE	F1	B1	W1	C1	VARIES
108	WAREHOUSE	F1	B1	W1	C1	VARIES
109	RESTROOM	F1	B1	W2/W3	C2	8'-0"
110	RESTROOM	F1	B1	W2/W3	C2	8'-0"
111	JANITOR	F1	B1	W2/W3	C2	8'-0"

FLOOR:
F1 CONCRETE

BASE:
B1 NONE

WALLS:
W1 OPEN TO STRUCTURE / METAL LINER PANELS
W2 PAINTED GPDW PT-1
W3 FRP WAINSCOT FRP-1

CEILING:
C1 OPEN TO STRUCTURE
C2 PAINTED GPDW PT-1

Legend

CONCRETE

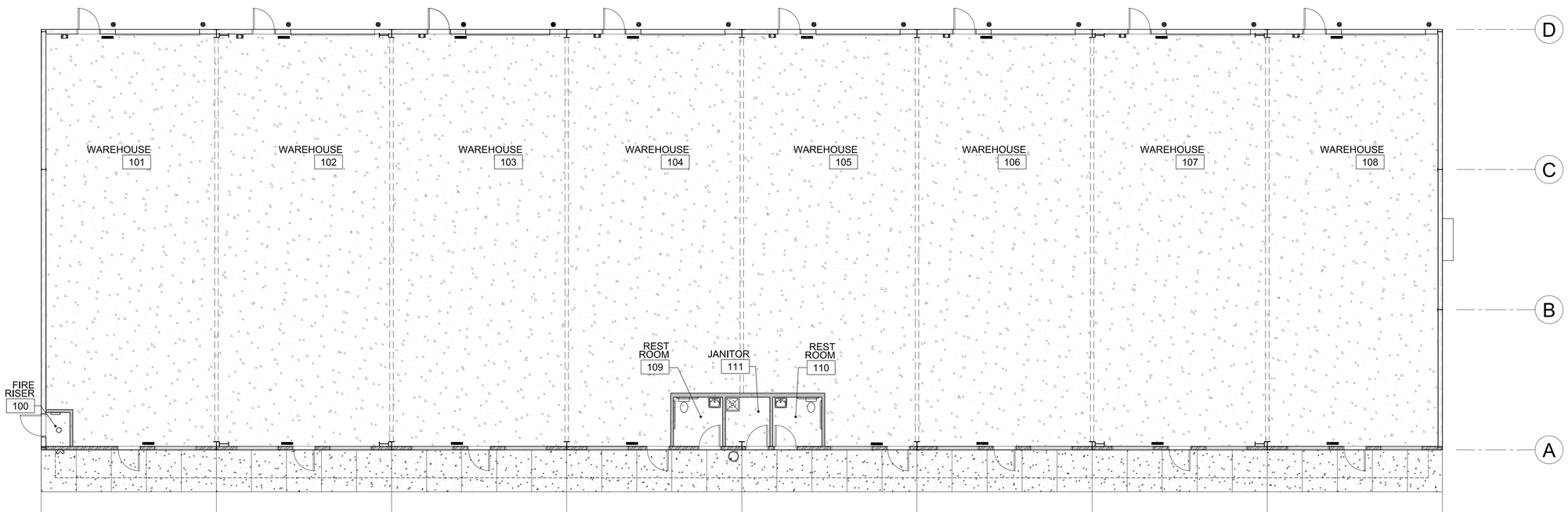

A1 Room Finish Plan

Scale: 1/8"=1'-0"

Plan North

REVISIONS	BY

These drawings are the property of W. Alan Kenson & Associates P.C., and may not be reproduced in any way without the written consent of W. Alan Kenson & Associates, P.C.

REGISTERED ARCHITECT CERTIFICATE NO. 25646 W. ALAN KENSON Date Signed 07/31/24 ARIZONA U.S.A. EXPIRES: 6/30/27

W. Alan Kenson & Associates, P.C.
P 928-443-5812
F 928-443-5815
P.O. Box 11593
Prescott, AZ 86304
email: waka@cableone.net
www.kenson-associates.com
ARCHITECTURE & PLANNING

DRAWING: Room Finish Plan and Materials Schedule

PROJECT: JSC Contracting Building B
6601 Inter Cal Way
Prescott, AZ 86301

APN: 103-50-054D

CNPLANS_B2407-176 6601 INTER CAL WAY PLANS

DRAWN BY	L.O.
CHECKED BY	W.A.K.
DATE	July 31st, 2024
JOB NO.	799
SHEET	A8.0

Jul 31, 2024 - 9:03am

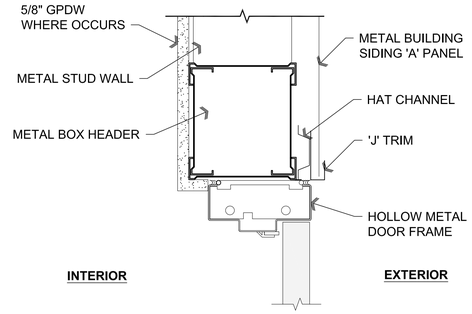

B4 Door Head

SCALE: 3" = 1'-0"

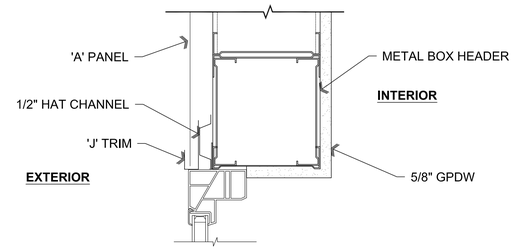

C4 Window Head

SCALE: 3" = 1'-0"

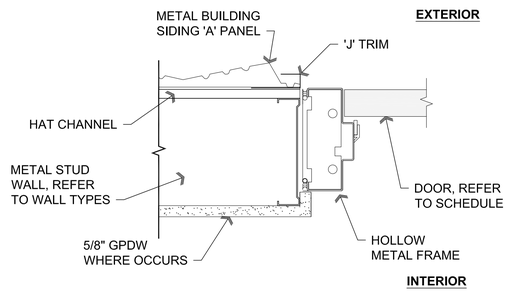

B3 Door Jamb

SCALE: 3" = 1'-0"

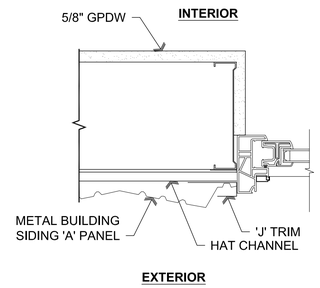

C3 Window Jamb

SCALE: 3" = 1'-0"

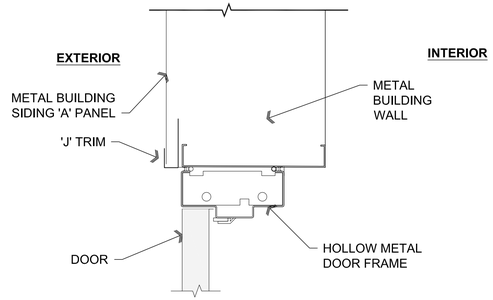

B2 Door Head

SCALE: 3" = 1'-0"

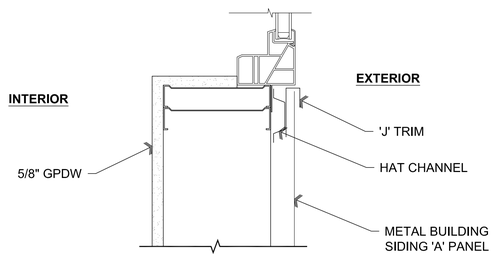

C2 Window Sill

SCALE: 3" = 1'-0"

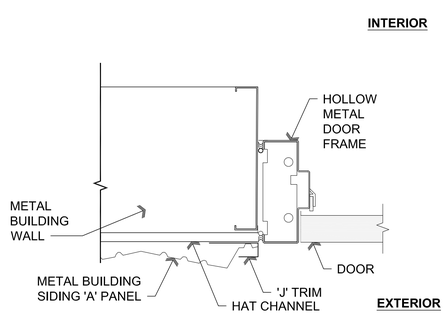

B1 Door Jamb

SCALE: 3" = 1'-0"

REVISIONS	BY

These drawings are the property of W. Alan Kenson & Associates P.C., and may not be reproduced in any way without the written consent of W. Alan Kenson & Associates, P.C.

REGISTERED ARCHITECT
CERTIFICATE NO. 25646
W. ALAN KENSON
Date Signed 07/31/24
ARIZONA U.S.A.
EXPIRES: 6/30/27

W. Alan Kenson & Associates, P.C.
P 928-443-5812
F 928-443-5815
P.O. Box 11593
Prescott, AZ 86304
email: waka@cableone.net
www.kenson-associates.com
ARCHITECTURE & PLANNING

DRAWING: Details

PROJECT: JSC Contracting Building B
6601 Inter Cal Way
Prescott, AZ 86301

APN: 103-50-054D

CNPLANS_B2407-176 6601 INTER CAL WAY PLANS

DRAWN BY	L.O.
CHECKED BY	W.A.K.
DATE	July 31st, 2024
JOB NO.	799
SHEET	A9.0

Oct 21, 2024 - 1:43pm

GENERAL STRUCTURAL NOTES

(APPLY UNLESS NOTED OTHERWISE ON PLANS/DETAILS)

GENERAL REQUIREMENTS:

1. THESE DRAWINGS, AND THEIR ASSOCIATED STRUCTURAL CALCULATIONS, HAVE BEEN PERFORMED USING STANDARDS OF PROFESSIONAL CARE AND COMPLETENESS NORMALLY EXERCISED UNDER SIMILAR CIRCUMSTANCES BY REPUTABLE STRUCTURAL ENGINEER'S IN THIS OR SIMILAR LOCALITIES. THEY NECESSARILY ASSUME THAT THE WORK DEPICTED WILL BE PERFORMED BY AN EXPERIENCED CONTRACTOR AND/OR WORKMEN WHO HAVE A WORKING KNOWLEDGE OF THE INTERNATIONAL BUILDING CODE CONVENTIONAL FRAMING REQUIREMENTS AND OF INDUSTRY ACCEPTED STANDARD GOOD PRACTICE. AS NOT EVERY CONDITION OR FRAMING ELEMENT IS (OR CAN BE) EXPLICITLY SHOWN ON THESE DRAWINGS, IT IS UNDERSTOOD THAT THE CONTRACTOR WILL USE INDUSTRY ACCEPTED STANDARD GOOD PRACTICE FOR ALL MISCELLANEOUS WORK NOT EXPLICITLY SHOWN.
2. THESE DRAWINGS REPRESENT THE FINISHED STRUCTURE. THEY DO NOT INDICATE THE METHOD OF CONSTRUCTION. THE CONTRACTOR SHALL BE SOLELY RESPONSIBLE FOR CONSTRUCTION MEANS, METHODS, TECHNIQUES, SEQUENCES AND PROCEDURES. CONSTRUCTION MATERIALS SHALL BE SPREAD OUT IF PLACED ON FRAMED CONSTRUCTION SUCH THAT DESIGN LIVE LOAD PER SQUARE FOOT AS STATED HEREIN IS NOT EXCEEDED. OPTIONS ARE FOR CONTRACTOR'S CONVENIENCE. IF AN OPTION IS USED, THE CONTRACTOR SHALL BE RESPONSIBLE FOR ALL NECESSARY CHANGES, AND SHALL COORDINATE ALL DETAILS, AT NO ADDITIONAL COST TO OWNER.
3. WHERE DISCREPANCIES OCCUR BETWEEN PLANS, DETAILS, GENERAL STRUCTURAL NOTES AND SPECIFICATIONS, THE GREATER REQUIREMENTS SHALL GOVERN. TYPICAL DETAILS AND NOTES ARE NOT NECESSARILY INDICATED ON THE PLANS, BUT SHALL APPLY NONE-THE-LESS. WHERE NO DETAILS ARE SHOWN, CONSTRUCTION SHALL CONFORM TO SIMILAR WORK ON THE PROJECT. DETAILS MAY SHOW ONLY ONE SIDE OF CONNECTION OR MAY OMIT INFORMATION FOR CLARITY.
4. ESTABLISH AND VERIFY ALL OPENINGS AND INSERTS FOR ARCHITECTURAL, MECHANICAL, PLUMBING AND ELECTRICAL WITH APPROPRIATE TRADES, DRAWINGS AND SUBCONTRACTORS PRIOR TO CONSTRUCTION. CONTRACTOR SHALL BE RESPONSIBLE FOR VERIFICATION OF ALL DIMENSIONS WITH ARCHITECTURAL DRAWINGS PRIOR TO START OF CONSTRUCTION. RESOLVE ANY DISCREPANCY WITH THE ARCHITECT AND STRUCTURAL ENGINEER.
5. ANY INSPECTIONS, SPECIAL (IBC CHAPTER 17) OR OTHERWISE THAT ARE REQUIRED BY THE BUILDING CODES, LOCAL BUILDING DEPARTMENTS, OR BY THESE PLANS SHALL BE DONE BY AN INDEPENDENT INSPECTION COMPANY OR THE BUILDING DEPARTMENT, SITE VISITS BY THE STRUCTURAL ENGINEER DO NOT CONSTITUTE AN OFFICIAL INSPECTION, UNLESS SPECIFICALLY CONTRACTED FOR.
6. SHOP DRAWINGS SHALL BE SUBMITTED FOR ALL STRUCTURAL ITEMS IN ADDITION TO ITEMS REQUIRED BY ARCHITECTURAL SPECIFICATIONS. THE CONTRACTOR SHALL REVIEW ALL SHOP DRAWINGS PRIOR TO SUBMITTAL. ITEMS NOT IN ACCORDANCE WITH CONTRACT DRAWINGS SHALL BE FLAGGED UPON HIS REVIEW. VERIFY ALL DIMENSIONS WITH ARCHITECT. ANY CHANGES, SUBSTITUTIONS, OR DEVIATIONS FROM ORIGINAL CONTRACT DRAWINGS SHALL BE CLOUDED. ANY OF THE AFOREMENTIONED WHICH ARE NOT CLOUDED OR FLAGGED BY SUBMITTING PARTIES, SHALL NOT BE CONSIDERED APPROVED AFTER THE STRUCTURAL ENGINEER'S REVIEW, UNLESS NOTED ACCORDINGLY. ANY STRUCTURAL ENGINEERING PROVIDED BY OTHERS AND SUBMITTED FOR REVIEW, SHALL BEAR THE SEAL OF A STRUCTURAL ENGINEER REGISTERED IN THE APPROPRIATE STATE. THE SHOP DRAWINGS DO NOT REPLACE THE ORIGINAL CONTRACT DRAWINGS. ITEMS OMITTED OR SHOWN INCORRECTLY AND ARE NOT FLAGGED BY THE STRUCTURAL ENGINEER ARE NOT TO BE CONSIDERED CHANGES TO ORIGINAL DRAWINGS. THE ADEQUACY OF ENGINEERING DESIGNS AND LAYOUT PERFORMED BY THE OTHERS RESTS WITH THE DESIGNING OR SUBMITTING AUTHORITY. REVIEWING IS INTENDED ONLY AS AN AID TO THE CONTRACTOR IN OBTAINING CORRECT SHOP DRAWINGS. RESPONSIBILITY FOR CORRECTNESS SHALL REST WITH THE CONTRACTOR. ALLOW (5) WORKING DAYS FOR THE STRUCTURAL ENGINEER'S REVIEW. ONE COPY OF EACH SUBMITTAL WILL BE RETAINED FOR THE STRUCTURAL ENGINEER'S RECORDS.

BASIS FOR DESIGN:

1. BUILDING CODE: 2018 EDITION OF THE IBC WITH CITY/COUNTY AMENDMENTS.

   RISK CATEGORY = II
2. VERTICAL LOADS:

LOCATION	LIVE / SNOW LOAD	DEAD LOAD
ROOF	30 PSF	15 PSF

3. SEISMIC DESIGN PARAMETERS:

ANALYSIS PROCEDURE	EQUIVALENT LATERAL FORCE PROCEDURE
IMPORTANCE FACTOR	Ie = 1.00
SITE CLASS	C
SEISMIC DESIGN CATEGORY	B
SPECTRAL RESPONSE ACCELERATIONS	Sms = 0.532, Sm1 = 0.251
SPECTRAL RESPONSE COEFFICIENTS	Sds = 0.355, Sd1 = 0.167
HORIZONTAL SHEAR TRANSFER ELEMENTS:	
STEEL X-BRACE (S)	R = 3.25 Cs=0.109
VERTICAL SHEAR TRANSFER ELEMENTS:	
INTERMEDIATE STEEL MOMENT FRAMES(S)	R = 4.5 Cs=0.079
STEEL X-BRACE (S)	R = 3.25 Cs=0.109

4. WIND DESIGN PARAMETERS (STRENGTH):

ULTIMATE WIND SPEED	101 MPH (3 SECOND GUST)
WIND EXPOSURE	C
INTERNAL PRESSURE COEFFICIENT	+/-0.18
COMPONENT AND CLADDING PRESSURE	COMPONENT AND CLADDING PRESSURE VARIES BY COMPONENT AREA AND LOCATION SEE STRUCTURAL CALCULATIONS

FOUNDATION NOTES:

1. FOUNDATIONS DESIGNED IN CONFORMANCE WITH RECOMMENDATIONS BY: **ENGINEERING TESTING CONSULTANTS, INC. REPORT NO. 6270 DATED FEBRUARY 5, 2007 AND UPDATED DECEMBER 20, 2022.**
2. SITE PREPARATION AND GRADING REQUIREMENTS OF THE SOIL REPORT AND ANY ADDENDUM'S SHALL BE COMPLETED PRIOR TO CONSTRUCTION OF FOUNDATIONS. ANY TESTS OR INSPECTIONS REQUIRED BY THE SOIL REPORT SHALL BE PERFORMED PRIOR TO PLACEMENT OF FOUNDATION REINFORCING STEEL OR CONCRETE. ALTERATIONS TO SITE PREPARATION OR GRADING SHALL BE REPORTED TO THE GEOTECHNICAL ENGINEER PRIOR TO FOUNDATION CONSTRUCTION.

THE SOIL DESIGN VALUES FOR THE FOUNDATION ARE:

ALLOWABLE BEARING PRESSURE	2000 PSF
ALLOWABLE LATERAL PASSIVE PRESSURE	400 PSF/FT
ALLOWABLE LATERAL SLIDING COEFFICIENT	0.45
LATERAL BACKFILL PRESSURE (UNRESTRAINED)	35 PSF/FT
LATERAL BACKFILL PRESSURE (RESTRAINED)	55 PSF/FT
SITE CLASS	C

3. A ONE-THIRD INCREASE IN BEARING PRESSURES IS ALLOWED WITH SEISMIC OR WIND LOAD COMBINATIONS. LATERAL BEARING AND LATERAL SLIDING RESISTANCE MAY BE COMBINED.

FOUNDATION BEARING DEPTH
18" BELOW FINISHED GRADE

4. ALL FOUNDATIONS SHALL BEAR ON UNDISTURBED NATURAL SOIL OR COMPACTED ENGINEERED FILL 18 INCHES MINIMUM BELOW FINISH GRADE PER TABLE ABOVE. GRADE IS DEFINED AS TOP OF SLAB FOR INTERIOR FOOTINGS AND LOWEST ADJACENT GRADE WITHIN 5 FEET OF THE BUILDING FOR PERIMETER FOOTINGS. WHERE EXTERIOR PAVING OR CONCRETE IS DIRECTLY ADJACENT TO BUILDING, GRADE IS DEFINED AS TOP OF EXTERIOR PAVING AT LEAST 5 FEET FROM BUILDING. CONCRETE FOOTING EXCAVATIONS SHALL BE CLEAN AND FREE OF LOOSE DEBRIS OR UN-COMPACTED MATERIAL AT TIME OF CONCRETE PLACEMENT.
5. CONCRETE SLABS ON GRADE SHALL BE SUPPORTED ON A 14 INCH LAYER OF SELECT FILL MATERIAL ACCORDING TO THE SPECIFICATIONS OF THE SOIL REPORT. FILL MATERIAL SHOULD BE MOISTENED, BUT NOT SATURATED JUST PRIOR TO PLACING CONCRETE.

CONCRETE:

1. MINIMUM 28 DAY CONCRETE STRENGTH SHALL BE AS FOLLOWS:

USE:	CONCRETE STRENGTH:	REMARKS:
FOUNDATIONS	3000 PSI	DESIGNED FOR 2500 PSI
CONCRETE SLABS ON GRADE	3000 PSI	W/O INSPECTION

2. ALL NORMAL WEIGHT CONCRETE SHALL BE REGULAR WEIGHT OF 150 POUNDS PER CUBIC FOOT USING HARD-ROCK AGGREGATES. AGGREGATE USED IN CONCRETE SHALL CONFORM TO ASTM C67 FOR ¾", ASTM C57 FOR 1" AND ASTM C467 FOR 1½" AGGREGATE.
3. TENSION LAP SPLICES OF REINFORCING STEEL IN CONCRETE SHALL BE AS FOLLOW:

REBAR SIZE	STANDARD LAP
#3	20"
#4	32"
#5	39"
#6	47"

LAP SPLICES FOR BEAMS AND FLOOR SLABS SHALL BE ACCORDING TO CHAPTER 12 OF ACI 318 OR LAP SCHEDULE ON THESE DRAWINGS.

NO TACK WELDING OF REINFORCING BARS ALLOWED WITHOUT PRIOR REVIEW OF PROCEDURE WITH THE STRUCTURAL ENGINEER. LATEST ACI CODE AND DETAILING MANUAL APPLY. PROVIDE BENT CORNER BARS TO MATCH AND LAP WITH HORIZONTAL BARS AT ALL CORNERS AND INTERSECTIONS PER TYPICAL DETAILS. VERTICAL WALL BARS SHALL BE SPLICED AT OR NEAR FLOOR LINES.

4. ALL DIMENSIONS SHOWING THE LOCATION OF REINFORCING STEEL NOT NOTED AS "CLEAR" OR "CLR" ARE TO CENTER OF STEEL. MINIMUM COVER FOR NON-PRESTRESSED CONCRETE REINFORCING SHALL BE AS FOLLOWS:

LOCATION:	MINIMUM COVER	TOLERANCE
CAST AGAINST EARTH (FOOTINGS)	3"	± ⅜"
SLABS ON GRADE	1½"	± ¼"
EXPOSED TO EARTH OR WEATHER – #5 AND SMALLER	1½"	± ⅜"
EXPOSED TO EARTH OR WEATHER – #6 AND LARGER	2"	± ⅜"

5. MAXIMUM SLUMP FOR ALL CONCRETE SHALL BE 4". SLUMP FOR EXTERIOR SLABS SHALL BE 6". PORTLAND CEMENT SHALL CONFORM TO ASTM C150. TYPE V CEMENT SHALL BE USED FOR CONCRETE IN CONTACT WITH ALKALINE SOIL, AND TYPE II ELSEWHERE.
6. NO MORE THAN 90 MINUTES SHALL ELAPSE BETWEEN CONCRETE BATCHING AND CONCRETE PLACEMENT UNLESS APPROVED BY THE TESTING AGENCY.
7. CONCRETE PLACEMENT AND QUALITY SHALL BE PER RECOMMENDATIONS IN ACI 614, ACI 301 AND ACI 318. MECHANICALLY VIBRATE ALL CONCRETE WHEN PLACED, EXCEPT THAT SLABS ON GRADE NEED BE VIBRATED ONLY AROUND AND UNDER FLOOR DUCTS, ETC. CAST CLOSURE POUR, WHERE SHOWN ON PLANS AROUND COLUMNS AFTER COLUMN DEAD LOAD IS APPLIED. REMOVE ALL DEBRIS FROM FORMS BEFORE PLACING CONCRETE.

   ALL ITEMS TO BE CAST IN CONCRETE SUCH AS REINFORCING, DOWELS, BOLTS, ANCHORS, PIPES, SLEEVES, ETC., SHALL BE SECURELY POSITIONED IN THE FORMS BEFORE PLACING THE CONCRETE.
8. ALL CONCRETE SLABS ON GRADE SHALL BE DIVIDED INTO AREAS BY CONTROL JOINTS (KEYED OR SAW CUT) SUCH THAT ONE SLAB AREA DOES NOT EXCEED 250 SQUARE FEET, OR BE MORE THAN TWO TIMES LONGER THAN THE SLAB AREA WIDTH. THE FOUNDATION PLAN SHOWS A SUGGESTED METHOD OF CONTROL JOINT LAYOUT. IT IS RECOMMENDED THAT SAW CUTS BE MADE WITHIN 16 HOURS OF CONCRETE BATCHING.

   KEYED CONTROL JOINTS NEED ONLY OCCUR AT EXPOSED EDGES DURING POURING, ALL OTHER JOINTS MAY BE SAW CUT.
9. FLY ASH MAY BE USED ONLY IF PERMITTED BY ARCHITECTURAL SPECIFICATIONS AND SHALL BE LIMITED TO 18 PERCENT OF CEMENTITIOUS MATERIALS AND SHALL HAVE A REPLACEMENT FACTOR OF 1.2 RELATIVE TO CEMENT REPLACED. NO FLY ASH ADDITIVES SHALL BE USED IN FLATWORK OR ARCHITECTURALLY EXPOSED CONCRETE.
10. COLD/HOT WEATHER CONCRETE CONSTRUCTION: PROTECT CONCRETE FROM DAMAGE OR REDUCED STRENGTH IN COMPLIANCE WITH ACI 305 AND 306.

REINFORCING STEEL:

1. ASTM A615 GRADE 60 (FY = 60 KSI) DEFORMED BARS GRADE 60 DEFORMED BARS SHALL BE USED FOR CONCRETE WALLS, BEAMS, ELEVATED SLABS AND COLUMN REINFORCING.
2. WELDING OF REINFORCING BARS SHALL BE MADE ONLY TO ASTM A706 GRADE 60 BARS AND ONLY USING E90 SERIES RODS. WELDING OF REINFORCING BARS SHALL BE MADE ONLY AT LOCATIONS SHOWN ON PLANS OR DETAILS.
3. REINFORCING BAR SPACING GIVEN ARE MAXIMUM ON CENTERS. ALL BARS PER CRSI SPECIFICATIONS AND HANDBOOK. DOWEL ALL VERTICAL REINFORCING TO FOUNDATION. SECURELY TIE ALL BARS IN LOCATION BEFORE PLACING CONCRETE.

STEEL:

1. MATERIALS: ROLLED W SHAPES, SHALL CONFORM TO ASTM A992 (FY=50 KSI). ALL OTHER STRUCTURAL STEEL SHAPES, ROLLED SECTIONS, BARS AND PLATES SHALL CONFORM TO ASTM A36 (FY = 36 KSI). ALL PIPE STEEL SHALL BE ASTM A501 (FY = 36 KSI) OR ASTM A53, TYPE E OR S, GRADE B (FY = 35 KSI). ALL TUBULAR STEEL SHALL BE ASTM A500 (FY = 46 KSI).
2. ALL STUDS AND WOOD TO STEEL BOLTS SHALL BE ASTM A307, UNLESS NOTED OTHERWISE. ALL EXPANSION BOLTS TO HAVE CURRENT ICBO RATING FOR MATERIAL INTO WHICH INSTALLATION TAKES PLACE. HEADED STUDS SHALL CONFORM TO ALL REQUIREMENTS OF THE LATEST EDITION OF THE "RECOMMENDED PRACTICES FOR STUD WELDING" AND THE "STRUCTURAL WELDING CODE" PUBLISHED BY AWS. ALL BOLTS, ANCHOR BOLTS, EXPANSION BOLTS, ETC. SHALL BE INSTALLED WITH STEEL WASHERS AT FACE OF WOOD OR AT SLOTTED HOLES IN STEEL SECTIONS.
3. ALL STRUCTURAL AND MISCELLANEOUS STEEL SHALL BE FABRICATED AND ERECTED IN ACCORDANCE WITH AISC SPECIFICATIONS FOR THE DESIGN, FABRICATION AND ERECTION OF STRUCTURAL STEEL FOR BUILDINGS, LATEST EDITION.
4. WELDING SHALL BE BY WELDERS HOLDING VALID CERTIFICATES AND HAVING CURRENT EXPERIENCE IN THE TYPE OF WELD SHOWN ON THE DRAWINGS OR NOTES. ALL WELDING SHALL USE E70 SERIES LOW HYDROGEN RODS UNLESS NOTED OTHERWISE. ALL WELDING PER LATEST AMERICAN WELDING SOCIETY STANDARDS. ALL WELDS ON DRAWINGS ARE SHOWN AS SHOP WELDS. CONTRACTOR MAY SHOP WELD OR FIELD WELD AT HIS DISCRETION. ALL FULL PENETRATION WELDS SHALL BE TESTED AND CERTIFIED BY AN INDEPENDENT TESTING LABORATORY.
5. STEEL TO STEEL BOLTED CONNECTIONS: HIGH STRENGTH BOLTS SHALL BE ASTM A325N AND SHALL BE INSTALLED AS BEARING-TYPE CONNECTIONS WITH THREADS INCLUDED IN SHEAR PLANE (TYPE "N" CONNECTION). BOLTS MAY BE TIGHTENED USING ANY AISC APPROVED METHOD.
6. DRYPACK SHALL BE 5,000 PSI FIVE STAR NON-SHRINK GROUT OR EQUIVALENT. INSTALL DRYPACK UNDER BEARING PLATES BEFORE FRAMING MEMBER IS INSTALLED. AT COLUMNS, INSTALL DRYPACK UNDER BASE PLATES AFTER COLUMN HAS BEEN PLUMBED BUT PRIOR TO FLOOR OR ROOF INSTALLATION.

COLD FORMED STEEL (ICBO ER 4943P):

1. MATERIALS: STANDARD COLD-FORMED STEEL JOISTS, TRACK, BRIDGING AND STRAPS SHALL CONFORM TO AISI NAS-01 WITH 2004 SUPPLEMENT (FY = 33 KSI). STEEL FOR PURLINS AND GIRTS SHALL CONFORM TO (FY = 55 KSI). STEEL SHALL BE GALVANIZED AT EXTERIOR WALLS AND FRAMING.
2. FRAMING SHALL BE FABRICATED AND ERECTED IN ACCORDANCE WITH MANUFACTURER'S RECOMMENDATIONS AND IN ACCORDANCE WITH THE LATEST EDITION OF "SPECIFICATIONS FOR THE DESIGN OF COLD-FORMED STEEL STRUCTURAL MEMBERS" BY THE AMERICAN IRON AND STEEL INSTITUTE(AISI).
3. ALL STUDS SHALL BE SECURELY SEATED FOR FULL END BEARING ON TOP AND BOTTOM TRACK. UNLESS NOTED OTHERWISE, PROVIDE DOUBLE STUDS AT ALL JAMBS, CORNERS, INTERSECTIONS, BEAM BEARINGS AND JOIST BEARINGS.
4. ALL WELDING SHALL BE PERFORMED BY WELDERS EXPERIENCED IN LIGHT GAGE STRUCTURAL STEEL FRAMING WORK. MEMBERS SHALL HAVE THE FOLLOWING MINIMUM EFFECTIVE PROPERTIES PER STEEL STUD MANUFACTURERS ASSOCIATION(SSMA):

TYPE/STYLE	MEMBER	MILS(GA)	FY
3⅝"X20GA. STUD	362S162-33	33(20)	33KSI
3⅝"X20GA. TRACK	362T162-33	33(20)	33KSI
6"X18GA. STUD	600S162-43	43(18)	33KSI
6"X18GA. TRACK	600T162-43	43(18)	33KSI

SPECIAL INSPECTION ITEMS:

1. THE OWNER SHALL EMPLOY A SPECIAL INSPECTOR DURING CONSTRUCTION OF CERTAIN TYPES OF WORK. PER IBC SECTION 1704 AND THE STRUCTURAL ENGINEER OF RECORD, SPECIAL INSPECTION IS (IS NOT) REQUIRED AS FOLLOWS:

TYPE OF WORK:	REQUIRED:	REMARKS:
SOIL BEARING SUBGRADE	YES	PER GEOTECHNICAL ENGINEER
CONCRETE SLAB ON GRADE	NO	DESIGN BASED ON f'c=2500 PSI
CONCRETE FOUNDATIONS	NO	DESIGN BASED ON f'c=2500 PSI
REINFORCING STEEL FOR ALL CONCRETE/ MASONRY THAT REQUIRES INSPECTION	YES	PRIOR TO PLACEMENT OF CONCRETE OR GROUT
BOLTS, ANCHORS CAST IN CONCRETE	YES	DURING PLACEMENT OF CONCRETE
STEEL TO STEEL BOLTED CONNECTIONS	YES	AFTER WORK IS COMPLETE

SPECIAL INSPECTIONS NOT LISTED ABOVE ARE NOT REQUIRED BY FSE HOWEVER, ADDITIONAL SPECIAL INSPECTIONS MAY BE REQUIRED BY THE BUILDING OFFICIAL

2. DESIGNATION OF SPECIAL INSPECTOR: A SPECIAL INSPECTION CERTIFICATE – CORRESPONDING TO THE REQUIREMENTS IN THE TABLE ABOVE HAS BEEN PROVIDED WITH THESE DRAWINGS BY FSE FOR PERMITTING PURPOSES.
   A. ACCORDING TO THE SI CERTIFICATE, THE SPECIAL INSPECTOR SHALL BE, OR WORK UNDER THE DIRECT SUPERVISION OF THE STRUCTURAL ENGINEER OF RECORD – FROST STRUCTURAL ENGINEERING(FSE) (928)776-4757. FSE IS NOT RESPONSIBLE FOR SPECIAL INSPECTIONS IF WE ARE NOT CONTACTED OR CONTRACTED TO DO SO.
   B. TO SCHEDULE ANY SPECIAL INSPECTION, THE CONTRACTOR SHALL BE RESPONSIBLE FOR CONTACTING THE SPECIAL INSPECTOR AT LEAST ONE DAY IN ADVANCE.
   C. AN ALTERNATE SPECIAL INSPECTOR MAY BE USED BY OBTAINING A NEW SI CERTIFICATE, AND MAKE THE NECESSARY NOTIFICATIONS TO ALL PARTIES INVOLVED. THE ALTERNATE SPECIAL INSPECTOR SHALL BE AN ARIZONA LICENSED CIVIL OR STRUCTURAL ENGINEER OR AN ICC CERTIFIED SPECIAL INSPECTOR.
   D. FOR GEOTECHNICAL ITEMS LISTED ABOVE, THE SPECIAL INSPECTOR SHALL BE, OR WORK UNDER THE DIRECT SUPERVISION OF A GEOTECHNICAL ENGINEER OR THE BUILDING OFFICIAL.
3. QUALITY ASSURANCE PROGRAM:
   A. THE SPECIAL INSPECTOR SHALL OBSERVE THE WORK ASSIGNED TO BE CERTAIN IT CONFORMS WITH THE APPROVED DESIGN DRAWINGS AND SPECIFICATIONS.
   B. THE SPECIAL INSPECTOR SHALL FURNISH INSPECTION REPORTS TO THE BUILDING OFFICIAL, AND TO THE STRUCTURAL ENGINEER OF RECORD. ALL DISCREPANCIES SHALL BE BROUGHT TO THE IMMEDIATE ATTENTION OF THE CONTRACTOR FOR CORRECTION, THEN, IF UNCORRECTED, TO THE DESIGN AUTHORITY AND THE BUILDING OFFICIAL.
   C. UPON COMPLETION OF THE ASSIGNED WORK THE STRUCTURAL ENGINEER SHALL COMPLETE AND SIGN THE APPROPRIATE FORMS CERTIFYING THAT TO THE BEST OF HIS KNOWLEDGE THE WORK IS IN CONFORMANCE WITH THE APPROVED PLANS AND SPECIFICATIONS, AND THE APPLICABLE WORKMANSHIP PROVISIONS OF THE INTERNATIONAL BUILDING CODE.

DRAWING INDEX

SHEET	DESCRIPTION	DETAILS
S1	GENERAL STRUCTURAL NOTES	---
S1.1	TYPICAL DETAILS	T-SERIES
S1.2	TYPICAL DETAILS	T-SERIES
S2	FOUNDATION PLAN	---
S3	ROOF FRAMING PLAN	---
S3.1	STRUCTURAL FRAMING ELEVATIONS	---
S4	FOUNDATION DETAILS	100-SERIES
S5	FRAMING DETAILS	200-SERIES

This drawing is the property of FROST Structural Engineering, Inc. Legally, the drawing can NOT be copied in whole or in pieces. It is only to be used for the project and site specifically identified hereon and is not to be used on any other project. Contractor shall carefully review all dimensions, details, and conditions and report at once any error, inconsistency or omission discovered before construction. The contractor assumes full liability for deviations from the intent of these plans.

JOB NO.: 2024-076 | PROJECT MANAGER: RKF | CAD OPERATOR: IMC

FROST STRUCTURAL ENGINEERING
1678 Oaklawn Drive, Suite C
Prescott, Arizona 86305
phone: 928.776.4757
info@frost-structural.com
www.frost-structural.com

REVISIONS	BY

These drawings are the property of W. Alan Kenson & Associates P.C., and may not be reproduced in any way without the written consent of W. Alan Kenson & Associates, P.C.

Registered Professional Engineer (Structural) CERTIFICATE NO. 27341 RICHARD K. FROST Date Signed 6.17.24 ARIZONA, U.S.A. EXPIRES 9/30/2026

W. Alan Kenson & Associates, P.C.
P.O. Box 11593
Prescott, AZ 86304
P 928-443-5812
F 928-443-5815
email: waka@cableone.net
www.kenson-associates.com
ARCHITECTURE & PLANNING

DRAWING: GENERAL STRUCTURAL NOTES

PROJECT: JSC Contracting Building B
6601 Inter Cal Way
Prescott, AZ 86301

APN: 103-50-054D

CNPLANS_B2407-176 6601 INTER CAL WAY PLANS

DRAWN BY	IMC
CHECKED BY	RKF
DATE	6/17/24
JOB NO.	2024-076
SHEET	S1

Jun 17, 2024 - 6:31pm

KEY NOTES:

1. DIAGONAL TENSION BRACING AT SPACING AS SHOWN IN SCHEDULE.
2. STUDS FULL HEIGHT – TYPE, GAGE AND SPACING AS REQUIRED IN SCHEDULE.
3. CEILING (NOT BRACED TO RESIST LATERAL LOAD OF STUD WALL).

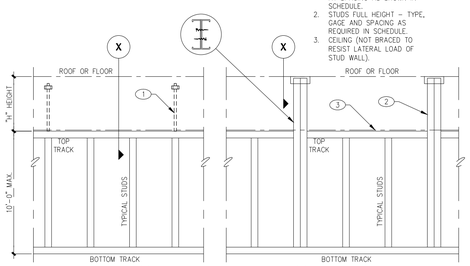

ALTERNATE "A" FOR SECTION "X", SEE DETAIL **T16**

ALTERNATE "B" FOR SECTION "X", SEE DETAIL **T16**

T15 ELEVATION – NON-BEARING CEILING HEIGHT INTERIOR WALL BRACING TO FLOOR/ROOF
02-LGS0703 — NO SCALE

KEY NOTES:

1. LIGHT GAUGE STEEL STUD SECTION. SEE PLANS, DETAILS AND G.S.N. FOR MORE SIZE.
2. CONTINUOUS LIGHT GAUGE STEEL TRACK PER PLANS OR DETAILS.
3. CONCRETE SLAB OR FOUNDATION.
4. STRUCTURAL STEEL TUBE OR STEEL BEAM PER PLAN.
5. LIGHT GAUGE STEEL CEILING JOIST. SEE DETAILS OR G.S.N. FOR SIZE.
6. CONTINUOUS TRACK SECTION SAME DEPTH AS JOIST W/ (2) #10X1.25" SCREWS AT EACH STUD.
7. HORIZONTAL BRACING, SAME SIZE AS JOIST WITH (1) #10X1.25" SCREW AT EACH JOIST. SPACED AT 6'-0" O.C. MAXIMUM.
8. 0.177"ø X ¾" LONG SHOT PINS AT 16" O.C.
9. TEKS SCREW (#12X1") OR 0.146"ø X1" SHOT PIN AT 16" O.C.
10. ¼"ø EXPANSION ANCHORS W/ 2.25" MINIMUM EMBEDMENT AT 48" O.C. OR 0.177"ø X ¾" LONG SHOT PINS AT 16" O.C. MAXIMUM.
11. CONNECT TRACK W/ (1) #8X¾" SCREW EACH SIDE OF EACH STUD OR CEILING JOIST.
12. #10 TEKS SCREW AT 12" O.C.

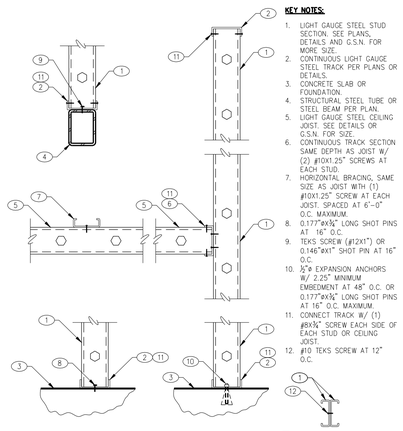

DOUBLE STUDS

T12 TYPICAL LIGHT GAUGE STEEL CONNECTIONS
02-LGS0101 — NO SCALE

KEY NOTES:

1. TYPICAL AT DOUBLE STUDS.
2. DOUBLE STUDS WHERE SHOWN ON PLANS AND DETAILS.
3. BOTH SIDES.
4. STEEL STUD.
5. UNPUNCHED STEEL STUD TRACK – ATTACHMENT REQUIRED ⅜"ø ANCHOR BOLTS AT 48" O.C. (2 MINIMUM) OR 0.177"ø X ¾" LONG POWDER DRIVEN PINS AT 12" O.C. FASTENER SHALL HAVE I.C.B.O. REPORT FOR SAME INSTALLATION.

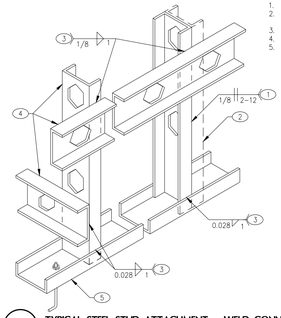

T8 TYPICAL STEEL STUD ATTACHMENT – WELD CONNECTION
02-LGS02 — NO SCALE

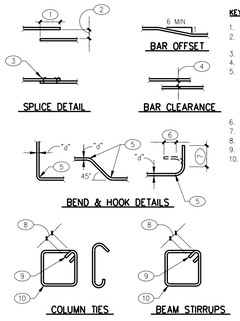

KEY NOTES:

1. LAP – SEE G.S.N.
2. MAXIMUM ⅓ LAP BUT NOT MORE THAN 6".
3. WIRE TIES.
4. 1d (1" MINIMUM).
5. RADIUS=3d FOR BARS NOT OVER #8; 4d FOR #9, #10 AND #11 BARS; 5d FOR #14 AND #18 BARS. 5d FOR ALL GRADE 40 BARS WITH 180 DEGREE HOOK.
6. 4d (4" MINIMUM).
7. 12d (90 DEGREE HOOK).
8. 6d (4" MINIMUM).
9. 135 DEGREE BEND.
10. BEND AROUND 1½" PIN FOR #3 BARS, BEND AROUND 2" PIN FOR #4 BARS. BEND AROUND 2½" PIN FOR #5 BARS.

T1 TYPICAL REINFORCING DETAILS
02-C01 — NO SCALE

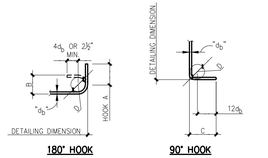

REBAR SIZE	END HOOKS ALL GRADES			
	180 HOOKS		90 HOOKS	BEND
	A	B	C	D
#3	5"	3"	6"	2.25"
#4	6"	4"	8"	3"
#5	7"	5"	10"	3.75"
#6	8"	6"	12"	4.5"
#7	10"	7"	14"	5.25"
#8	11"	8"	16"	6"

T4 TYPICAL STEEL REINFORCING HOOK SCHEDULE
02-C0102 — NO SCALE

KEY NOTES:

1. STEEL DECK WHERE OCCURS.
2. (2)-HILTI DN .148"ø PINS OR (2)-#10 SCREWS TO DECK.
3. CONCRETE SLAB WHERE OCCURS.
4. STEEL ANGLE 1½" X 18 GA. X 12" LONG.
5. #12 GAGE WIRES LOOPED AROUND TRACK AT STUD.
6. WALL COVERING WHERE OCCURS.
7. (2)-#10 SCREWS AT EACH BRACE.
8. CEILING LINE.
9. TOP TRACK.
10. STUD AT BRACE ATTACH BRACE.
11. DIAGONAL TENSION BRACE – 358 IC 25 GA. STUD EACH SIDE.
12. "Y"- VERTICAL WHERE "H" IS 8'-0" OR LESS. "2" MAX WHERE "H" IS GREATER THAN 8'-0".

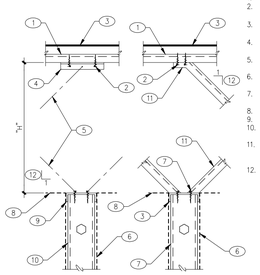

T16 NON-BEARING TOP TRACK SUPPORT DETAIL – TOP CONNECTION
02-LGS0704 — NO SCALE

KEY NOTES:

1. (2) FULL HEIGHT (KING) STUDS.
2. BUILT-UP HEADER PER SCHEDULE.
3. CRIPPLE STUD.
4. CONTINUOUS STEEL TRACK.
5. TRACK SECTION W/ (4) #10 TEKS SCREWS TO KING STUDS AND (2) #10 TEKS SCREWS TO EACH HEADER PIECE.
6. (2) #8 SCREWS AT 24" O.C. FROM BOTTOM.
7. (1) TRIMMER STUD.

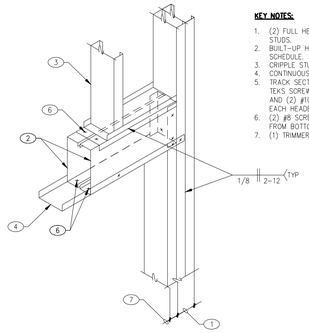

T9 LIGHT GUAGE STEEL BOX-BEAM HEADER
02-LGS03.1 — NO SCALE

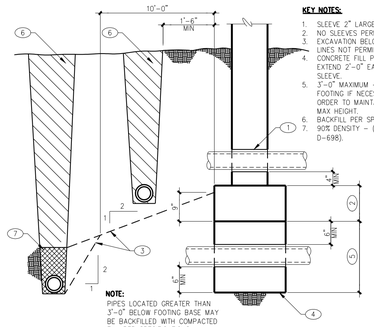

NOTE:
PIPES LOCATED GREATER THAN 3'-0" BELOW FOOTING BASE MAY BE BACKFILLED WITH COMPACTED FILL PER SPECIFICATIONS.

KEY NOTES:

1. SLEEVE 2" LARGER THAN PIPE.
2. NO SLEEVES PERMITTED.
3. EXCAVATION BELOW THESE LINES NOT PERMITTED.
4. CONCRETE FILL PIPE TRENCH – EXTEND 2'-0" EACH SIDE OF SLEEVE.
5. 3'-0" MAXIMUM – STEP FOOTING IF NECESSARY IN ORDER TO MAINTAIN 3'-0" MAX HEIGHT.
6. BACKFILL PER SPECS.
7. 90% DENSITY – (ASTM D-698).

T5 PIPES AND TRENCHES AT CONCRETE FOOTING
02-F03 — NO SCALE

REBAR SIZE (METRIC)	CLASS B TENSION SPLICE LENGTHS						COMP. BARS	
	f'c=3,000 PSI		f'c=4,000 PSI		f'c=5,000 PSI		f'c= ≥ 3,000	
	REGULAR	TOP	REGULAR	TOP	REGULAR	TOP	STD. LAP	ENCLOSED W/ SPIRAL TIES
#3	24"	31"	19"	24"	17"	22"	12"	12"
#4 (13)	32"	41"	25"	32"	22"	29"	15"	12"
#5 (16)	39"	51"	31"	40"	28"	36"	19"	14"
#6 (19)	47"	61"	37"	48"	33"	43"	23"	17"
#7 (22)	69"	89"	54"	70"	49"	63"	26"	20"
#8 (25)	78"	102"	62"	80"	55"	72"	30"	23"
#9	88"	115"	70"	91"	63"	81"	34"	25"
#10	99"	129"	79"	102"	70"	91"	38"	28"
#11	110"	143"	87"	113"	78"	101"	42"	31"

NOTES:

1. TOP BARS ARE ANY HORIZONTAL BARS PLACED SO THAT MORE THAN 12" OF FRESH CONCRETE IS CAST IN THE MEMBER BELOW THE REINFORCEMENT.
2. UNLESS NOTED OTHERWISE, LAP SPLICES IN CONCRETE BEAMS, SLABS AND WALLS SHALL BE CLASS "B" TENSION LAP SPLICES AND LAP SPLICES IN CONCRETE COLUMNS SHALL BE 20db.

T2 CONCRETE LAP SPLICES FOR STEEL REINFORCING
02-C02 — NO SCALE

GENERAL STRUCTURAL NOTES:

1. ALL COLD-FORMED STEEL FRAMING SHALL BE FABRICATED AND ACCORDANCE WITH MANUFACTURER'S RECOMMENDATIONS AND IN ACCORDANCE WITH THE LATEST EDITION OF "SPECIFICATIONS FOR THE DESIGN OF COLD-FORMED STEEL STRUCTURAL MEMBERS" BY THE AMERICAN IRON AND STEEL INSTITUTE AND METAL STUD MANUFACTURER'S ASSOCIATION – ICBO #4943.
2. STEEL FOR ALL STUDS AND FOR ALL GAGES OF TRACK, ACCESSORIES AND BRIDGING SHALL HAVE A MINIMUM YIELD STRENGTH OF 33 KSI.
3. ALL STUDS SHALL BE SECURELY SEATED FOR FULL END BEARING ON TOP AND BOTTOM TRACK. UNLESS NOTED OTHERWISE, PROVIDE DOUBLE STUDS AT ALL JAMBS, CORNERS, AND INTERSECTIONS. BRIDGING SHALL BE INSTALLED PER MANUFACTURER'S RECOMMENDATIONS AT MID HEIGHT OF WALL FOR WALLS LESS THAN 10'-0" HIGH, AND AT 5'-0" FOR WALLS GREATER THAN 10'-0" HIGH.

ALLOWABLE WALL HEIGHTS FOR FULL HEIGHT INTERIOR WALL PARTITIONS				BRACE SPACING WHERE OCCURS
STUD SIZE	TRACK SIZE	STUD SPACING		
		16" O.C.	24" O.C.	
600 XC 20GA	600 MT 20GA	32'-3" A.F.F.	28'-4" A.F.F.	10'-0" O.C.
358 XC 20GA	358 MT 20GA	21'-11" A.F.F.	19'-2" A.F.F.	10'-0" O.C.
358 XC 20GA	358 MT 20GA	14'-3" A.F.F.	11'-7" A.F.F.	8'-0" O.C.
250 XC 20GA	250 MT 20GA	16'-6" A.F.F.	14'-5" A.F.F.	8'-0" O.C.
250 XC 20GA	250 MT 20GA	11'-6" A.F.F.	9'-6" A.F.F.	8'-0" O.C.

VALUES BASED ON NO AXIAL LOAD, 5 PSF LATERAL LOAD, AND A DEFLECTION LIMIT OF H/120 (VERIFY WITH ARCHITECTURAL SPECIFICATIONS FOR SPECIAL REQUIREMENT). BRACING DESIGN BASED ON MAXIMUM HEIGHT (TO CEILING) OF 10'-0".

INSTALLATION OPTIONS:

1. STEEL STUDS WALLS THAT SPAN FULL HEIGHT TO UNDERSIDE OF STRUCTURE MAY BE INSTALLED UN-BRACED PER SCHEDULE ABOVE.
2. STEEL STUD WALLS PER SCHEDULE ABOVE MAT BE INSTALLED WHEN BRACED PER DETAIL 34 OR 35.
3. PLANS AND DETAILS OF OPTIONAL METHODS SHALL BE PROVIDED TO THE ENGINEER FOR REVIEW PRIOR TO INSTALLATION.
4. FOR ADDITIONAL INFORMATION, SEE DETAILS T9 THRU T16.
5. BOTTOM TRACK SHALL BE ATTACHED TO CONCRETE FLOORS USING ⅜"ø EXPANSION ANCHORS AT 48" O.C. (2 MIN PER TRACK) WITH 4" EMBEDMENT.

T13 NON-BEARING INTERIOR STEEL STUD WALL SCHEDULE
02-LGS0701 — NO SCALE

KEY NOTES:

1. STEEL STUD.
2. UN-PUNCHED STEEL STUD TRACK – ATTACHMENT REQUIRED ⅜"ø ANCHOR BOLTS AT 48" O.C. (2 MINIMUM) OR 0.145"ø X ¾" LONG POWDER DRIVEN PINS AT 12" O.C. FASTENER PER G.S.N.
3. DOUBLE STUD WHERE SHOWN ON PLAN AND DETAILS.
4. #8X¾" LONG TEK SCREWS EACH SIDE.
5. (2) #10X¾" LONG TEK SCREWS.
6. (4) #10X¾" LONG TEK SCREWS.
7. #10X¾" LONG TEK SCREWS AT 12" O.C. AT DOUBLE STUDS.

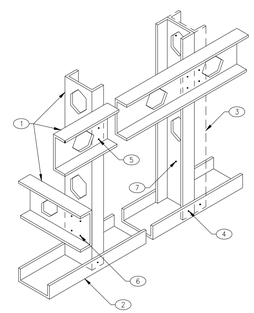

T10 TYPICAL STEEL STUD ATTACHMENT – SCREW CONNECTION
02-LGS01 — NO SCALE

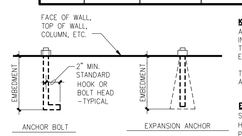

KEY NOTES:
ANCHOR OR BOLT DIAMETERS SPECIFIED IN DETAILS OR ON PLANS SHALL MEET THESE MINIMUM REQUIREMENTS FOR EMBEDMENT.

THICKNESS OF DRYPACK DOES NOT APPLY TOWARDS EMBEDMENT.

EXPANSION ANCHOR APPROVALS:
SIMPSON WEDGE-ALL (ESR-1396)
HILTI ANCHORS KWK-BOLT (ESR-1917).
POWERS POWER-STUD (ESR-2818)

BOLT SIZE	CAST IN PLACE EMBEDMENT(MINIMUM)		EXPANSION ANCHOR EMBEDMENT(MINIMUM)	
	VERTICAL	HORIZONTAL	VERTICAL	HORIZONTAL
1/4"ø	4"	4"	2"	1.125"
3/8"ø	5"	4"	3"	1.5"
1/2"ø	7"	4"	4"	2"
5/8"ø	8"	5"	5"	2.5"
3/4"ø	9"	6"	6"	3"
7/8"ø	10"	7"	7"	3.5"
1"ø	11"	8"	9"	4"

T6 TYPICAL ANCHOR BOLT, AND EXPANSION BOLT SCHEDULE
02-S0101 — NO SCALE

KEY NOTES:

1. CORNER BARS SAME SIZE AND SPACING AS HORIZONTAL REINFORCING. MINIMUM LAP PER G.S.N.
2. ALTERNATE DIRECTION OF BENDS.
3. CONCRETE STEM WALL OR FOOTING.
4. REINFORCING PER PLANS AND SCHEDULES.

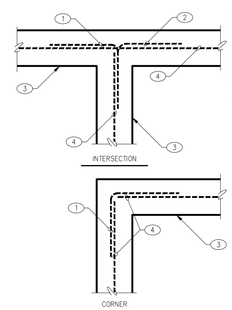

T3 PLAN – CORNER REINFORCING IN CONCRETE FOOTINGS AND/OR CONCRETE STEM WALLS
02-F02 — NO SCALE

KEY NOTES:

1. METAL WALL PANEL PER G.S.N.
2. METAL ROOF PANEL PER G.S.N.
3. #12 X 1.25" SELF-TAPPING TEKS SCREWS AT 12" O.C.
4. #12 X 1.25" SELF-TAPPING TEKS SCREWS WITH NEOPRENE WASHERS AT 12" O.C.
5. WALL PANEL STITCH SCREW: #14 X ¾" SELF-TAPPING TEKS SCREWS AT 18" O.C.
6. ROOF PANEL STITCH SCREW: #14 X ¾" SELF-TAPPING TEKS SCREWS AT 18" O.C. WITH CONTINUOUS MASTIC TAPE.

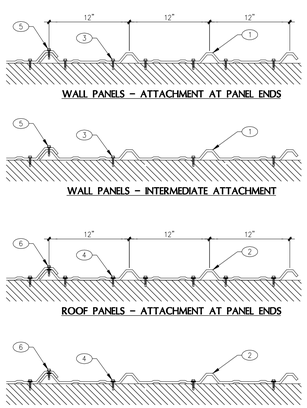

T17 TYPICAL "PBR" PANEL ROOFING/SIDING ATTACHMENT
02-SD05

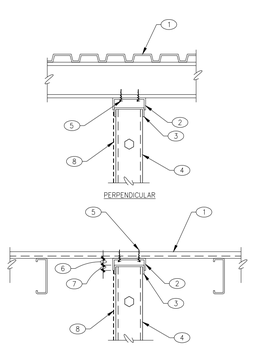

KEY NOTES:

1. STEEL DECK WHERE OCCURS.
2. 14 GA. CONTINUOUS BENT STEEL PLATE OR, DEEP LEG 14 GA. SLIP TRACK BY STUD MANUFACTURER.
3. STEEL STUD TRACK.
4. STEEL STUD WALL.
5. (2) #10 SCREWS.
6. 1" CLEAR MINIMUM – TYPICAL.
7. 1" MINIMUM – TYPICAL.
8. WALL COVERING WHERE OCCURS – DO NOT ATTACH TO SLIP TRACK OR BENT STEEL PLATE.

T14 NON-BEARING STEEL STUD TOP TRACK CONNECTION
02-LGS0702 — NO SCALE

KEY NOTES:

1. STEEL STUDS AND TRACK.
2. FULL HEIGHT KING STUD(S), SEE SCHEDULE BELOW FOR QUANTITY REQ'D.
3. STEEL STUD LINTEL PER SCHEDULE BELOW.
4. TRIMMER STUD(S) UNDER LINTEL PER SCHEDULE BELOW.

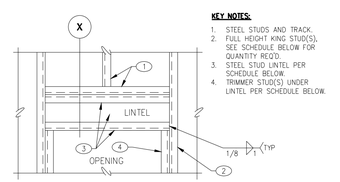

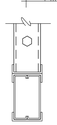

X SECTION

NOTE:
A. THIS SCHEDULE MAY BE USED ONLY IN WALLS WHERE NO OTHER HAS BEEN CALLED OUT ON PLANS OR DETAILS.

B. FOR CONNECTIONS NOT SHOWN, SEE TYPICAL STUD DETAILS T8 – T10 AND G.S.N.

ROUGH OPENING WIDTH	LINTEL STUDS	TOTAL KING STUDS EACH SIDE OF OPNG.	TOTAL TRIMMER STUDS EACH SIDE OF OPNG.
0'-0" TO 4'-0"	2-400XC18	1	1
4'-1" TO 8'-0"	2-600XC18	2	1
8'-1" TO 12'-0"	2-800XC18	3	2

T11 TYPICAL LINTELS IN STEEL STUD WALL
02-LGS0301 — NO SCALE

ALL THREAD SIZE	REBAR SIZE	SPACING OR EDGE DISTANCE	EMBEDMENT DEPTH	SPACING OR EDGE DISTANCE	EMBEDMENT DEPTH
3/8"ø	#3	2" TO 6"	8"	6" MIN.	6"
1/2"ø	#4	2" TO 6"	11"	6" MIN.	6"
5/8"ø	#5	2" TO 7.5"	12"	7.5" MIN.	7"
3/4"ø	#6	2" TO 9"	14"	9" MIN.	9"
7/8"ø	#7	3" TO 10.5"	16"	10.5" MIN.	11"
1"ø	#8	3" TO 12"	20"	12" MIN.	14"

1. CONCRETE: USE HILTI HIT-RE 500-SD ADHESIVE (ESR-2322) OR SIMPSON SET-XP (ESR-2508). MASONRY: USE SIMPSON "SET" ADHESIVE (ESR-1772).
2. INSTALL ALL SYSTEMS ACCORDING TO MANUFACTURERS RECOMMENDATIONS.
3. DO NOT PLACE ALL-THREAD ROD WITHIN MINIMUM EDGE DISTANCE TO FREE EDGE OF CONCRETE OR ADJACENT BOLTS.

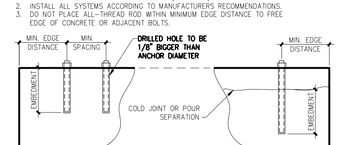

T7 TYPICAL EPOXY ANCHOR INSTALLATION
02-S0102 — NO SCALE

This drawing is the property of FROST Structural Engineering, Inc. Legally, the drawing can NOT be copied in whole or in pieces. It is only to be used for the project and site specifically identified hereon and is not to be used on any other project. Contractor shall carefully review all dimensions, details, and conditions and report at once any error, inconsistency or omission discovered before construction. The contractor assumes full liability for deviations from the intent of these plans.

JOB NO.: 2024-076 | PROJECT MANAGER: RKF | CAD OPERATOR: IMC

FROST STRUCTURAL ENGINEERING
1678 Oaklawn Drive, Suite C
Prescott, Arizona 86305
phone: 928.776.4757
info@frost-structural.com
www.frost-structural.com

REVISIONS	BY

These drawings are the property of W. Alan Kenson & Associates P.C., and may not be reproduced in any way without the written consent of W. Alan Kenson & Associates, P.C.

CERTIFICATE NO. 27341 RICHARD K. FROST 6.17.24 DATE ARIZONA U.S.A. Registered Professional Engineer (Structural) EXPIRES 9/30/2026

W. Alan Kenson & Associates, P.C.
P 928-443-5812
F 928-443-5815
P.O. Box 11593
Prescott, AZ 86304
email: waka@cableone.net
www.kenson-associates.com
ARCHITECTURE & PLANNING

DRAWING: TYPICAL DETAILS T-SEREIES

PROJECT: JSC Contracting Building B
6601 Inter Call Way
Prescott, AZ 86301

APN: 103-50-054D

CNPLANS_B2407-176.6601 INTER.CAL WAY.PLANS

DRAWN BY	IMC
CHECKED BY	RKF
DATE	6/17/24
JOB NO.	2024-076
SHEET	S1.1

Jun 17, 2024 - 6:32pm

NOMINAL BEAM DEPTH "D"	NUMBER OF ¾"ø ASTM, A325N BOLTS
UP TO 7"	2
8" – 11"	2
12" – 14"	3
15" – 17"	4
18" – 20"	5
21" – 23"	6
24" – 29"	7
30" – 32"	8
33" – 35"	9
36"	10

KEY NOTES:

1. THE TYPICAL STEEL BEAM TO STEEL COLUMN OR STEEL BEAM TO STEEL BEAM CONNECTION CONSISTS OF ⅜" THICK SINGLE SHEAR PLATES WITH ¾"ø ASTM A325N BOLTS. USE ⅜" SHEAR PLATES WHERE "D"=27" OR GREATER.
2. ALL BOLTS SHALL BE INSTALLED USING SHORT SLOTTED HOLES IN EITHER THE BEAM WEB OR THE SHEAR PLATE PER LATEST AISC SPECIFICATIONS.
3. MAINTAIN MINIMUM BOLT SPACING AND EDGE DISTANCES PER AISC SPECIFICATIONS 1.16.4 AND 1.16.5. AND AS SHOWN BELOW.
4. CLIP FLANGE FOR ½" CLR.
5. STEEL BEAM.
6. SHEAR PLATE.

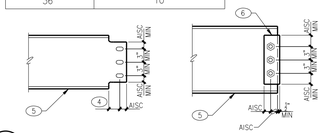

T20 BOLT SCHEDULE FOR STEEL CONNECTIONS
02-S02
NO SCALE

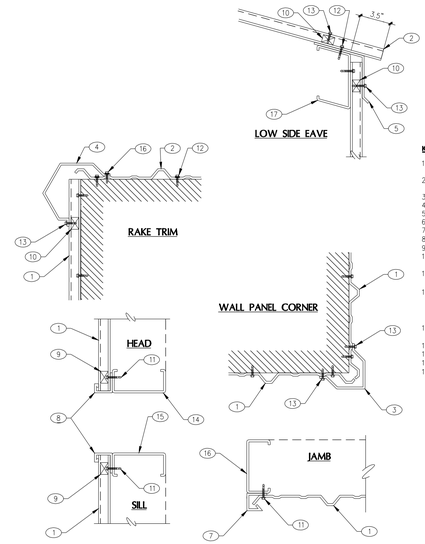

KEY NOTES:

1. METAL WALL PANEL PER ARCHITECTURAL DRAWINGS.
2. METAL ROOF PANEL PER ARCHITECTURAL DRAWINGS.
3. 24 GA. CORNER TRIM.
4. 24 GA. RAKE TRIM.
5. 24 GA. EAVE TRIM.
6. 24 GA. RIDGE CAP TRIM.
7. JAMB TRIM.
8. HEAD/SILL TRIM.
9. CLOSURE.
10. CLOSURE WITH MASTIC TAPE TOP AND BOTTOM.
11. #12 X 1.25" SELF-TAPPING TEKS SCREWS AT 12" O.C.
12. #12 X 1.25" SELF-TAPPING TEKS SCREWS WITH NEOPRENE WASHERS AT 12" O.C.
13. #14 X ⅞" SELF-TAPPING TEKS SCREWS AT 12" O.C.
14. STEEL HEADER.
15. STEEL GIRT.
16. STEEL "C" JAMB.
17. STEEL PURLIN OR EAVE PURLIN.

T18 TYPICAL METAL ROOFING/SIDING TRIM ATTACHMENT
02-SD06

WIRE ROPE OR STEEL ROD DIA.	TURNBUCKLE SIZE *
3/8	1/2
1/2	3/4
5/8	7/8
3/4	1
7/8	1 1/4
1	1 1/4

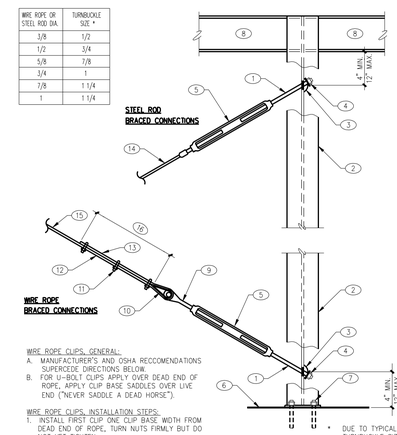

KEY NOTES:

1. THREADED STEEL ROD FITTING, SIZED TO MATCH TURNBUCKLE.
2. STEEL COLUMN (FLANGE AT BRACE CONNECTION SHOWN CUT AWAY FOR CLARITY).
3. HILLSIDE WASHER.
4. FLAT WASHER AND NUT.
5. TURNBUCKLE AT ONE END OF TENSION BRACE, SEE SCHEDULE BELOW FOR SIZE.
6. LINE OF FLOOR OR FOUNDATION AS OCCURS.
7. A.B.'s PER PLAN AT FOUNDATION.
8. STEEL BEAM OR OTHER FRAMING MEMBER.
9. JAW END TYPE FITTING, SIZED TO MATCH TURNBUCKLE.
10. EXTRA HEAVY DUTY WIRE ROPE THIMBLE (CROSBY G-414 OR SIMILAR)
11. WIRE ROPE CLIPS (CROSBY G-450, G-429 OR SIMILAR) PER SCHEDULE BELOW.
12. "LIVE" END OF WIRE ROPE
13. "DEAD" END OF WIRE ROPE
14. STEEL ROD BRACE w/ THREADED END, USE REDUCER COULPLING AS REQ'D TO FIT TURNBUCKLE.
15. ASTM A603 TYPE 6x19 WIRE ROPE.
16. LENGTH OF WIRE ROPE TO BE TURNED BACK PER SCHEDULE.

WIRE ROPE DIA. (IN.)	CLIP SIZE (IN.)	MIN. # OF CLIPS	INCHES OF ROPE TO TURN BACK	TORQUE (FT. LBS.)
3/8	3/8	2	6 1/2	45
1/2	1/2	3	11 1/2	65
5/8	5/8	3	12	95
3/4	3/4	4	18	130
7/8	7/8	4	19	225
1	1	5	26	225

WIRE ROPE CLIPS, GENERAL:

A. MANUFACTURER'S AND OSHA RECCOMENDATIONS SUPERCEDE DIRECTIONS BELOW.
B. FOR U-BOLT CLIPS APPLY OVER DEAD END OF ROPE, APPLY CLIP BASE SADDLES OVER LIVE END ("NEVER SADDLE A DEAD HORSE").

WIRE ROPE CLIPS, INSTALLATION STEPS:

1. INSTALL FIRST CLIP ONE CLIP BASE WIDTH FROM DEAD END OF ROPE, TURN NUTS FIRMLY BUT DO NOT YET TIGHTEN.
2. INSTALL SECOND CLIP AS CLOSE AS POSSIBLE / PRACTICAL TO THIMBLE. TURN NUTS FIRMLY BUT DO NOT YET TIGHTEN.
3. INSTALL THIRD OR MORE CLIPS SPACED EQUALLY PER SCHEDULE IN-BETWEEN FIRST TWO.
4. TIGHTEN ALL SLACK IN ROPE. FINAL TIGHTEN / TORQUE ALL CLIPS IN ALTERNATING FASHION.

* DUE TO TYPICAL LOW WORKING LOAD LIMITS OF TURNBUCKLES, TURNBUCKLE SIZE WILL BE BIGGER THAN WIRE ROPE OR ROD SIZE. ALTERNATE TURNBUCKLE SIZES ACCEPTED PER DEMONSTRATION / SUBMITTAL OF TURNBUCKLES WITH ACCEPTABLE WORKING LOADS.

T19 TYPICAL X-BRACING AT STEEL COLUMN (W-SHAPE)
NO SCALE

This drawing is the property of FROST Structural Engineering, Inc. Legally, the drawing can NOT be copied in whole or in pieces. It is only to be used for the project and site specifically identified hereon and is not to be used on any other project. Contractor shall carefully review all dimensions, details, and conditions and report at once any error, inconsistency or omission discovered before construction. The contractor assumes full liability for deviations from the intent of these plans.

JOB NO.: 2024-076 | PROJECT MANAGER: RKF | CAD OPERATOR: IMC

FROST STRUCTURAL ENGINEERING
1678 Oaklawn Drive, Suite C
Prescott, Arizona 86305
phone: 928.776.4757
info@frost-structural.com
www.frost-structural.com

REVISIONS	BY

These drawings are the property of W. Alan Kenson & Associates P.C., and may not be reproduced in any way without the written consent of W. Alan Kenson & Associates, P.C.

Registered Professional Engineer (Structural) CERTIFICATE NO. 27341 RICHARD K. FROST Date Signed 6.17.24 ARIZONA, U.S.A. EXPIRES 9/30/2026

W. Alan Kenson & Associates, P.C.
P.O. Box 11593
Prescott, AZ 86304
P 928-443-5812
F 928-443-5815
email: waka@cableone.net
www.kenson-associates.com
ARCHITECTURE & PLANNING

DRAWING: MORE TYPICAL DETAILS T-SERIES

PROJECT: JSC Contracting Building B
6601 Inter Cal Way
Prescott, AZ 86301

APN: 103-50-054D

CNPLANS_B2407-176.6601 INTER.CAL WAY PLANS

DRAWN BY	IMC
CHECKED BY	RKF
DATE	6/17/24
JOB NO.	2024-076
SHEET	S1.2

Jun 17, 2024 - 6:32pm

STEEL COLUMN (SC) SCHEDULE

MARK	SIZE	BASE CONNECTION	BASE CONNECTION TYPE	HAIRPIN	REMARKS
SC1	W14X61	¾" THK STEEL PLATE W/ (4) ¾"øX15" ASTM F1554 ANCHOR RODS	TYPE A	#5 HAIRPIN W/ 62" LEGS	STARTS AT TOP OF SLAB
SC2	W8X18	½" THICK STEEL PLATE W/ (2) ¾"øX12" LONG ASTM F1554 ANCHOR RODS	TYPE B	NONE	STARTS AT TOP OF SLAB
SC3	W16X40	½" THICK STEEL PLATE W/ (4) ¾"øX12" LONG ASTM F1554 ANCHOR RODS	TYPE C	NONE	STARTS AT TOP OF SLAB

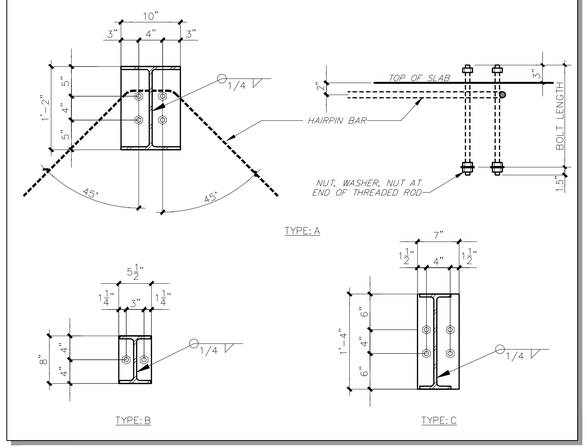

CONCRETE FOOTING (F) SCHEDULE

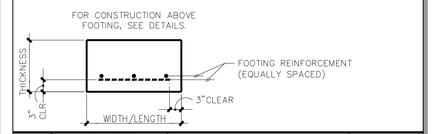

MARK	DIMENSIONS			FOOTING REINFORCING	REMARKS
	LENGTH	WIDTH	THICKNESS		
F1	5'-0"	5'-0"	12"	(6) #5 EACH WAY	---
F2	3'-0"	3'-0"	12"	(5) #4 EACH WAY	---

CONCRETE WALL FOOTING (WF) SCHEDULE

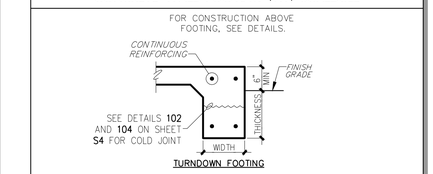

MARK	DIMENSIONS		FOOTING REINFORCING	FOOTING TYPE
	WIDTH	THICKNESS		
WF1	12"	18"	(2) #3 CONTINUOUS TOP AND BOTTOM	TURNDOWN

WALL SCHEDULE

-HATCHING INDICATES STRUCTURAL ELEMENT CONTINUES TO THE NEXT LEVEL (VERIFY WITH ARCHITECTURAL DRAWINGS).
-SEE PLAN SCHEDULES, DETAILS, AND GENERAL STRUCTURAL NOTES FOR ADDITIONAL INFORMATION.

AS SEEN ON PLANS	INDICATES-
	6" STEEL C STUD WALL STUDS: 600S162-43 MILS (18GA), 33 KSI AT 24" O.C. (1) TRIMMER STUD AT EACH JAMB/(1) KING STUD AT EACH JAMB FOR OPENINGS UP TO 4'-0" WIDE/(2) KING STUDS AT EACH JAMB FOR OPENINGS UP TO 4'-0" WIDE/ SEE ALSO DETAIL T11
	METAL BUILDING WALL FRAMING W/ HORIZONTAL GIRTS PER FRAMING ELEVATIONS.

FOUNDATION PLAN NOTES

1. VERIFY ALL DIMENSIONS WITH ALL ARCHITECTURAL DRAWINGS.
2. FOR LOCATION OF DETAILS SEE SHEET INDEX ON SHEET S1.
3. ALL SCHEDULED MARK DESIGNATIONS MAY NOT NECESSARILY BE FOUND ON THIS PLAN. SCHEDULES ARE TYPICAL TO THIS PROJECT.
4. THE DEPTH OF FOOTING DIMENSION INDICATED IN THE G.S.N. IS A MINIMUM. FOUNDATION CONTRACTOR SHALL COORDINATE WITH THE SOILS REPORT AND OTHER TRADES TO INSURE THAT THESE MINIMUMS ARE SUFFICIENT FOR THE WORK. SEE TYPICAL DETAILS FOR ADDITIONAL REQUIREMENTS.
5. WF1, WF2, ETC. – AS SHOWN ON PLAN INDICATES A CONTINUOUS WALL FOOTING. SEE WALL FOOTING SCHEDULE FOR ADDITIONAL INFORMATION.
6. F1, F2, ETC. – AS SHOWN ON PLAN INDICATES A CONCRETE FOOTING. SEE FOOTING SCHEDULE FOR ADDITIONAL INFORMATION.
7. SC1, SC2, ETC. – AS SHOWN ON PLAN INDICATES A STEEL COLUMN. SEE STEEL COLUMN SCHEDULE FOR ADDITIONAL INFORMATION. COLUMNS START AT THE LEVEL THEY ARE CALLED OUT ON.
8. CCJ – AS SHOWN ON PLAN INDICATES LOCATION OF EITHER A KEYED OR A SAW CUT CONTROL JOINT IN THE SLAB ON GRADE AT CONTRACTOR'S OPTION. SEE GENERAL STRUCTURAL NOTES AND DETAIL 101.
9. VERIFY EXACT SIZE AND LOCATION OF DEPRESSED AND/OR RAISED SLABS WITH ARCHITECTURAL DRAWINGS.
10. FOR SIDEWALK AND LANDING LOCATIONS, SEE ARCHITECTURAL DRAWINGS.

PLAN KEYNOTES

1. HAIRPIN BAR PER STEEL COLUMN SCHEDULE.
2. COLUMN DIMENSIONS TYPICAL AT PORTAL COLUMNS (BAYS AT GRID LINES 2-3, 7-8)

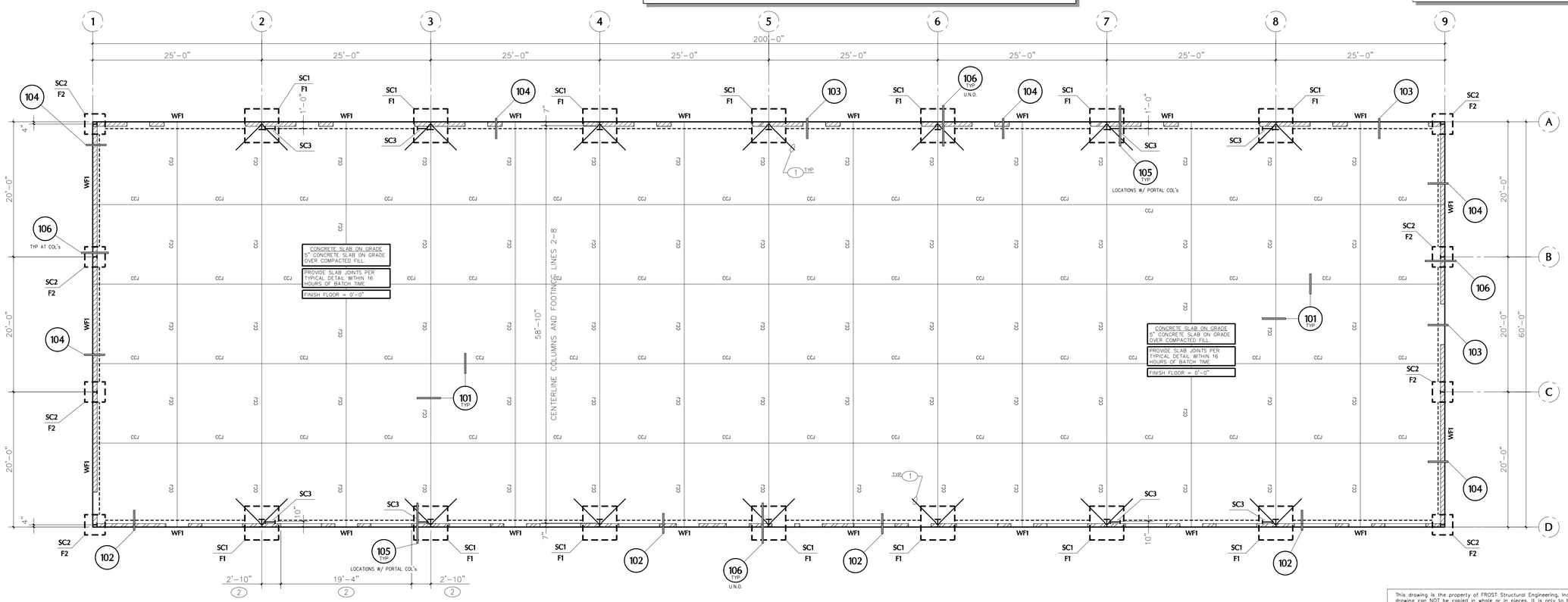

FOUNDATION PLAN

SCALE: 1/8" = 1'-0"

PROJECT NORTH

This drawing is the property of FROST Structural Engineering, Inc. Legally, the drawing can NOT be copied in whole or in pieces. It is only to be used for the project and site specifically identified hereon and is not to be used on any other project. Contractor shall carefully review all dimensions, details, and conditions and report at once any error, inconsistency or omission discovered before construction. The contractor assumes full liability for deviations from the intent of these plans.

JOB NO.: 2024-076 | PROJECT MANAGER: RKF | CAD OPERATOR: IMC

FROST STRUCTURAL ENGINEERING
1678 Oaklawn Drive, Suite C
Prescott, Arizona 86305
phone: 928.776.4757
info@frost-structural.com
www.frost-structural.com

REVISIONS	BY

These drawings are the property of W. Alan Kenson & Associates P.C., and may not be reproduced in any way without the written consent of W. Alan Kenson & Associates, P.C.

Registered Professional Engineer (Structural) CERTIFICATE NO. 27341 RICHARD K. FROST Date Signed 6.17.24 ARIZONA, U.S.A. EXPIRES 9/30/2026

W. Alan Kenson & Associates, P.C.
P 928-443-5812 P.O. Box 11593
F 928-443-5815 Prescott, AZ 86304
email: waka@cableone.net
www.kenson-associates.com
ARCHITECTURE & PLANNING

REGISTERED ARCHITECT

CITY OF PRESCOTT ARIZONA

DRAWING: FOUNDATION PLAN

PROJECT: JSC Contracting Building B
6601 Inter Cal Way
Prescott, AZ 86301

APN: 103-50-054D

CNPLANS_B2407-176 6601 INTER CAL WAY PLANS

DRAWN BY	IMC
CHECKED BY	RKF
DATE	6/17/24
JOB NO.	2024-076
SHEET	S2

Jun 17, 2024 - 6:32pm

STEEL BEAM (B) SCHEDULE

MARK	SIZE	CAMBER
B1	W24X62	STANDARD
B2	W8X18	STANDARD
B3	W12X19	STANDARD
B4	W16X40	---

STEEL PURLIN (SP) SCHEDULE

MARK	SIZE	REMARKS
SP1	8"X2.5"X12GA. 'Z' PURLIN AT 5'-0" O.C.	---

EAVE STRUT (S) SCHEDULE

MARK	SIZE
S1	8"x5"x5", 14GA.

WALL SCHEDULE

NOTE:	SEE PLAN SCHEDULES, DETAILS AND GENERAL STRUCTURAL NOTES FOR ADDITIONAL INFORMATION.
AS SEEN ON PLANS	INDICATES-
	STRUCTURAL WALL BELOW (BEARING WALL, SHEARWALL, OR EXTERIOR WALL).
	NON-STRUCTURAL WALL BELOW.
	PARAPET WALL.

ROOF FRAMING PLAN NOTES

1. VERIFY ALL DIMENSIONS WITH ALL ARCHITECTURAL DRAWINGS.
2. FOR LOCATION OF DETAILS SEE SHEET INDEX ON SHEET S1.
3. ALL SCHEDULED MARK DESIGNATIONS MAY NOT NECESSARILY BE FOUND ON THIS PLAN. SCHEDULES ARE TYPICAL TO THIS PROJECT.
4. B1, B2, ETC. – AS SHOWN ON PLAN INDICATES A STEEL BEAM. SEE STEEL BEAM SCHEDULE FOR ADDITIONAL INFORMATION.
5. SP1, SP2, ETC. – AS SHOWN ON PLAN INDICATES STEEL PURLINS. SEE STEEL PURLIN SCHEDULE FOR ADDITIONAL INFORMATION.
6. S1, S2, ETC. – AS SHOWN ON PLAN INDICATES EAVE STRUTS. SEE EAVE STRUT SCHEDULE FOR ADDITIONAL INFORMATION.
7. FOR CLARITY, DETAILS MAY SHOW ONLY ONE SIDE OF FRAMING CONDITION.
8. FOR CLARITY, ALL ROOF OPENINGS MAY NOT BE SHOWN ON THE ROOF FRAMING PLAN. FOR EXACT SIZE, NUMBER AND LOCATION OF OPENINGS, SEE ARCHITECTURAL, MECHANICAL, PLUMBING, AND ELECTRICAL DRAWINGS. FOR FRAMING AT OPENINGS, SEE TYPICAL DETAILS.
9. VERIFY EXACT SIZE AND WEIGHT OF EQUIPMENT ON ROOF WITH MECHANICAL CONTRACTOR.

PLAN KEYNOTES

1. L2½x2½x¼ BRACES AT EVERY OTHER PURLIN AS SHOWN SEE DETAIL **201**.
2. X-BRACING, SEE SHEET **S3.1**.

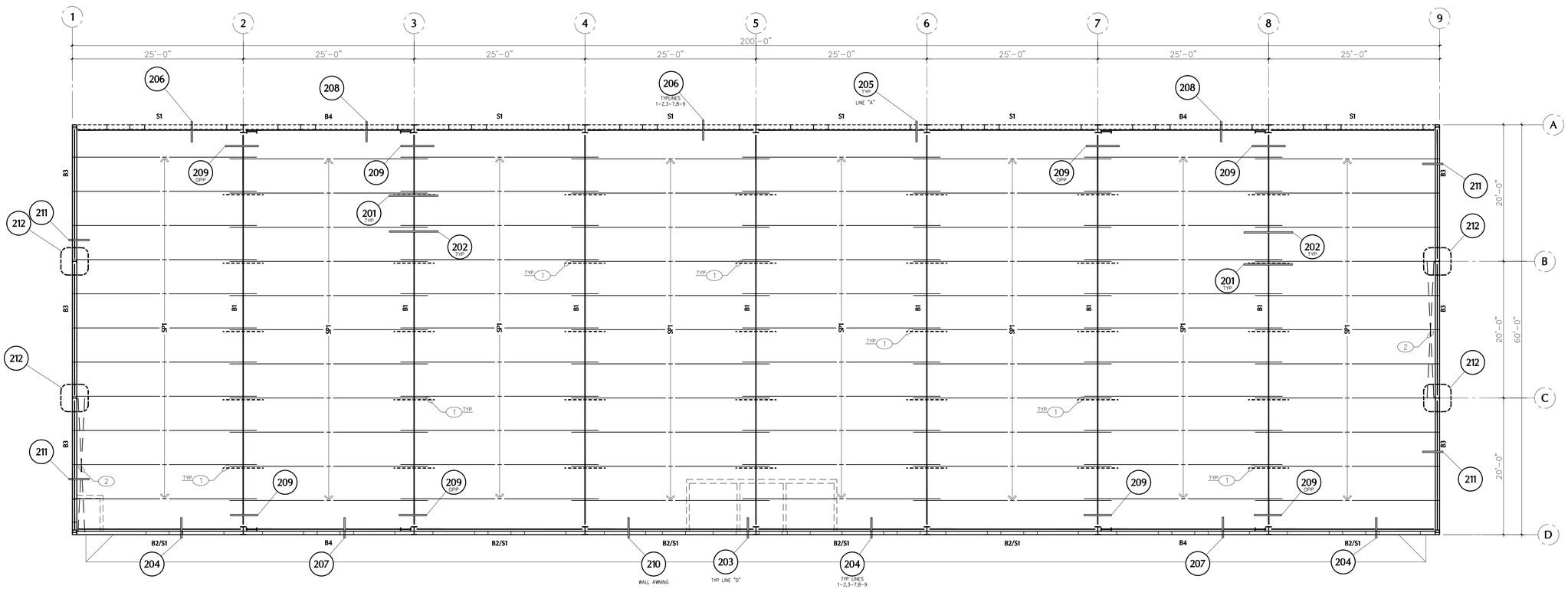

ROOF FRAMING PLAN

SCALE: 1/8" = 1'-0"

PROJECT NORTH

This drawing is the property of FROST Structural Engineering, Inc. Legally, the drawing can NOT be copied in whole or in pieces. It is only to be used for the project and site specifically identified hereon and is not to be used on any other project. Contractor shall carefully review all dimensions, details, and conditions and report at once any error, inconsistency or omission discovered before construction. The contractor assumes full liability for deviations from the intent of these plans.

JOB NO.: 2024-076	PROJECT MANAGER: RKF	CAD OPERATOR: IMC

FROST STRUCTURAL ENGINEERING
1678 Oaklawn Drive, Suite C
Prescott, Arizona 86305
phone: 928.776.4757
info@frost-structural.com
www.frost-structural.com

REVISIONS	BY

These drawings are the property of W. Alan Kenson & Associates P.C., and may not be reproduced in any way without the written consent of W. Alan Kenson & Associates, P.C.

Registered Professional Engineer (Structural)
CERTIFICATE NO. 27341
RICHARD K. FROST
Date Signed 6.17.24
ARIZONA, U.S.A.
EXPIRES 9/30/2026

W. Alan Kenson & Associates, P.C.
P 928-443-5812
F 928-443-5815
P.O. Box 11593
Prescott, AZ 86304
email: waka@cableone.net
www.kenson-associates.com
ARCHITECTURE & PLANNING

DRAWING: ROOF FRAMING PLAN

PROJECT: JSC Contracting Building B
6601 Inter Cal Way
Prescott, AZ 86301

APN: 103-50-054D

CNPLANS_B2407-176.6601 INTER.CAL WAY.PLANS

DRAWN BY	IMC
CHECKED BY	RKF
DATE	6/17/24
JOB NO.	2024-076
SHEET	S3

Jun 17, 2024 - 6:33pm

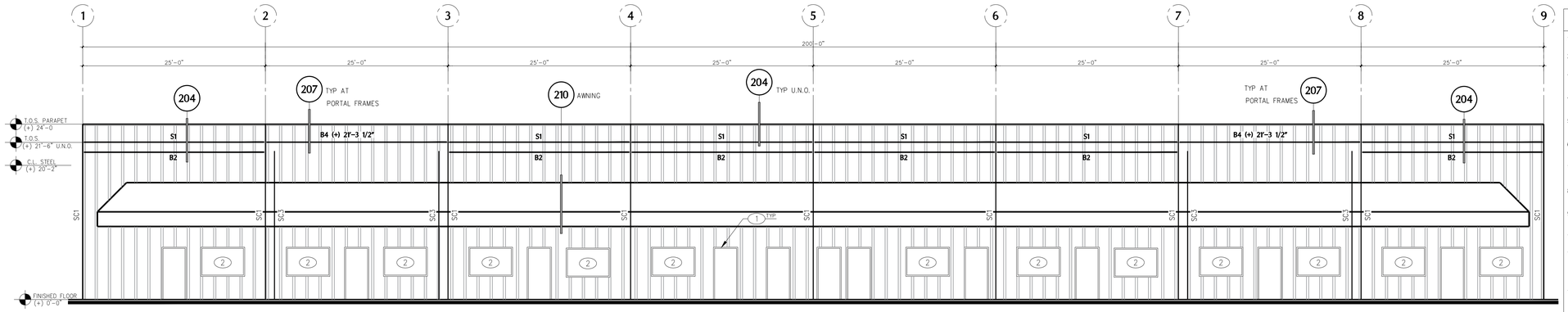

A–A EAST – STRUCTURAL FRAMING ELEVATION

SCALE: 1/8" = 1'-0"

STRUCTURAL ELEVATION NOTES

1. VERIFY ALL DIMENSIONS WITH ALL ARCHITECTURAL DRAWINGS.
2. FOR LOCATION OF DETAILS SEE SHEET INDEX ON SHEET S1.
3. ALL SCHEDULED MARK DESIGNATIONS MAY NOT NECESSARILY BE FOUND ON THIS PLAN. SCHEDULES ARE TYPICAL TO THIS PROJECT.
4. B1, B2, ETC. – AS SHOWN ON PLAN INDICATES A STEEL BEAM. SEE STEEL BEAM SCHEDULE FOR ADDITIONAL INFORMATION.
5. RJ1, RJ2, ETC. – AS SHOWN ON PLAN INDICATES ROOF JOISTS. SEE ROOF JOIST SCHEDULE FOR ADDITIONAL INFORMATION.
6. S1, S2, ETC. – AS SHOWN ON PLAN INDICATES EAVE STRUTS. SEE EAVE STRUT SCHEDULE FOR ADDITIONAL INFORMATION.
7. G1, G2, ETC. – AS SHOWN ON PLAN INDICATES A WIND GIRT. SEE WIND GIRT SCHEDULE FOR ADDITIONAL INFORMATION.
8. X1, X2, ETC. – AS SHOWN ON PLAN INDICATES AN X–BRACE. SEE X–BRACE SCHEDULE FOR ADDITIONAL INFORMATION.
9. J1, J2, ETC. – AS SHOWN ON PLAN INDICATES A DOOR JAMB. SEE JAMB SCHEDULE FOR ADDITIONAL INFORMATION.
10. FOR CLARITY, DETAILS MAY SHOW ONLY ONE SIDE OF FRAMING CONDITION.
11. FOR CLARITY, ALL ROOF OPENINGS MAY NOT BE SHOWN ON THE ROOF FRAMING PLAN. FOR EXACT SIZE, NUMBER AND LOCATION OF OPENINGS, SEE ARCHITECTURAL, MECHANICAL, PLUMBING, AND ELECTRICAL DRAWINGS. FOR FRAMING AT OPENINGS, SEE TYPICAL DETAILS.
12. [¯] – AS SHOWN ON PLAN INDICATES HVAC EQUIPMENT ON ROOF [_] OR IN ATTIC SPACE. SEE TYPICAL DETAILS FOR FRAMING INFORMATION.
13. VERIFY EXACT SIZE AND WEIGHT OF EQUIPMENT ON ROOF WITH MECHANICAL CONTRACTOR.

PLAN KEYNOTES

1. SEE TYPICAL DETAIL T11 FOR LIGHT GAGE STEEL WINDOW AND DOOR HEADERS
2. SEE ARCHITECTURAL DRAWINGS FOR SPECIFIC OPENING DIMENSIONS AND LOCATIONS
3. SLOT WALL GIRTS AT X–BRACING PER DETAIL 215.

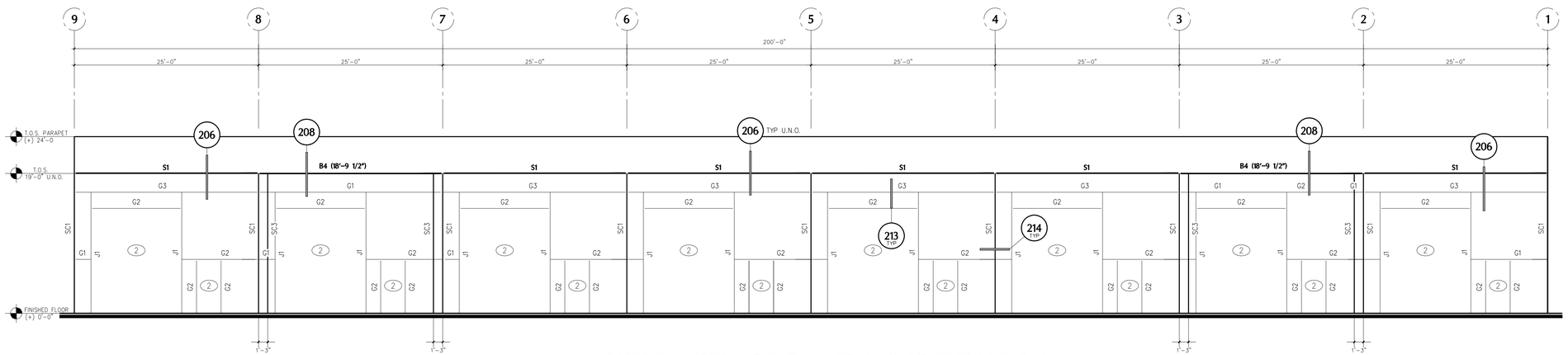

B–B WEST – STRUCTURAL FRAMING ELEVATION

SCALE: 1/8" = 1'-0"

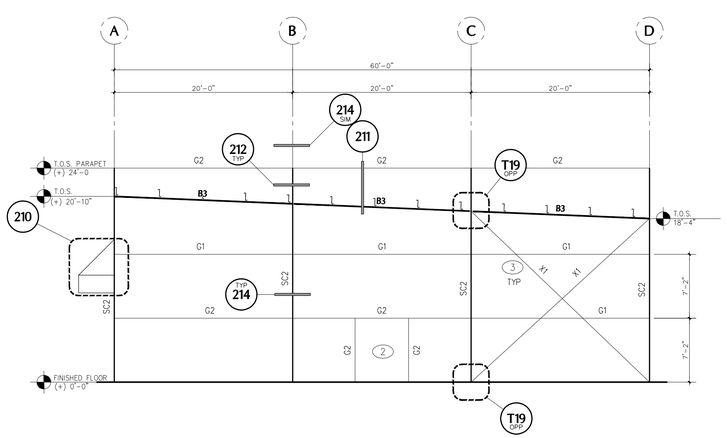

D–D NORTH – STRUCTURAL FRAMING ELEVATION

SCALE: 1/8" = 1'-0"

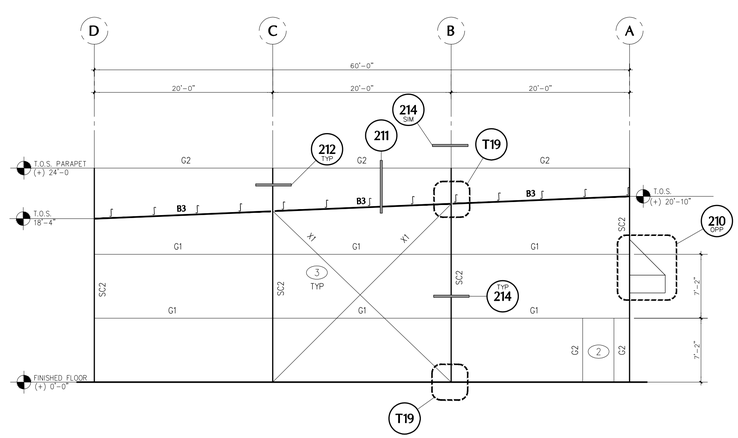

C–C SOUTH – STRUCTURAL FRAMING ELEVATION

SCALE: 1/8" = 1'-0"

X–BRACE (X) SCHEDULE

MARK	SIZE
X1	⅜"DIA. A307 ROD, OR 5/8" DIA. WIRE ROPE. SEE DETAIL T19.

OVERHEAD DOOR JAMBS (J) SCHEDULE

MARK	SIZE
J1	8"X2.5"X12 GA "C"

WIND GIRT (G) SCHEDULE

MARK	SIZE
G1	8"X2.5"X14 GA. "Z"
G2	8" X 2.5" X 14 GA. "C"
G3	8" X 2.5" X 12 GA. "C"

STEEL BEAM (B) SCHEDULE

MARK	SIZE	CAMBER
B1	W24X62	STANDARD
B2	W8X18	STANDARD
B3	W12X19	STANDARD
B4	W16X40	---

EAVE STRUT (S) SCHEDULE

MARK	SIZE
S1	8"x5"x5", 14GA.

This drawing is the property of FROST Structural Engineering, Inc. Legally, the drawing can NOT be copied in whole or in pieces. It is only to be used for the project and site specifically identified hereon and is not to be used on any other project. Contractor shall carefully review all dimensions, details, and conditions and report at once any error, inconsistency or omission discovered before construction. The contractor assumes full liability for deviations from the intent of these plans.

JOB NO.: 2024-076 | PROJECT MANAGER: RKF | CAD OPERATOR: IMC

FROST STRUCTURAL ENGINEERING
1678 Oaklawn Drive, Suite C
Prescott, Arizona 86305
phone: 928.776.4757
info@frost-structural.com
www.frost-structural.com

REVISIONS	BY

These drawings are the property of W. Alan Kenson & Associates P.C., and may not be reproduced in any way without the written consent of W. Alan Kenson & Associates, P.C.

Registered Professional Engineer (Structural) CERTIFICATE NO. 27341 RICHARD K. FROST Date Signed 6.17.24 ARIZONA U.S.A. EXPIRES 9/30/2026

W. Alan Kenson & Associates, P.C.
P 928-443-5812 P.O. Box 11593
F 928-443-5815 Prescott, AZ 86304
email: waka@cableone.net
www.kenson-associates.com
ARCHITECTURE & PLANNING

REGISTERED ARCHITECT W. ALAN KENSON

CITY OF PRESCOTT ARIZONA

DRAWING: STRUCTURAL FRAMING ELEVATIONS

PROJECT: JSC Contracting Building B
6601 Inter Cal Way
Prescott, AZ 86301

APN: 103-50-054D

CNPLANS_B2407-176.6601 INTER CAL WAY PLANS

DRAWN BY	IMC
CHECKED BY	RKF
DATE	6/17/24
JOB NO.	2024-076
SHEET	S3.1

Jun 17, 2024 - 6:33pm

KEY NOTES:

1. WALL PANEL/SIDING PER ARCHITECTURAL DRAWINGS.
2. CONTINUOUS CONCRETE TURN-DOWN FOOTING.
3. SIDEWALK, PAVEMENT, OR FINISH GRADE PER ARCHITECTURAL DRAWINGS.
4. CONTINUOUS BASE ANGLE PER MANUFACTURER W/ ⅜"øx2" (MIN.) EXPANSION ANCHOR AT 48" O.C. AND WITH-IN 6" O.C. OF ENDS. ACCEPTABLE ANCHORS: SIMPSON WEDGE-ALL (ESR-1396). HILTI KWIK-BOLT (ESR-1917). POWERS POWER-STUD (ESR-2818).
5. CONCRETE SLAB ON GRADE.
6. MINIMUM FOOTING DEPTH PER G.S.N.
7. ALTERNATE ANCHORAGE: 0.106"øx1" SHOT PINS AT 24" O.C. ACCEPTABLE ANCHORS: HILTI X-DNI (ESR-1663). SIMPSON CDP-100KT (ESR-2811).
8. FOOTING REINFORCING. SEE SCHEDULE FOR ACTUAL NUMBER OF REBAR AND POSITION.
9. #3 L-SHAPED BENT BAR; 16"H., 9"V. AT 48" O.C. (LAP W/ #5 VERTICALS).
10. #5 HOOKED BAR AT 48" O.C. (ALTERNATE BENDS).
11. OPTIONAL COLD JOINT.

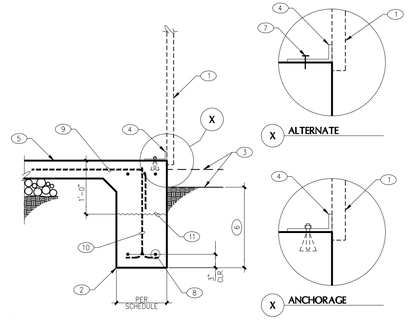

104 PRE-ENGINEERED BUILDING AT CONCRETE FOOTING
08-MB-CF0104 NO SCALE

KEY NOTES:

1. CONCRETE SLAB ON GRADE.
2. CONTINUOUS KEYED JOINT.
3. SAWCUT: ⅛" WIDE X ¼" SLAB THICKNESS IN DEPTH. CUT SHALL BE MADE SOON ENOUGH TO PREVENT SHRINKAGE CRACKING, BUT NOT SO SOON AS TO CAUSE SPALLING OF THE CONCRETE WHILE SAWING. WORK MUST BE COMPLETE WITHIN 16 HOURS OF CONCRETE PLACEMENT.

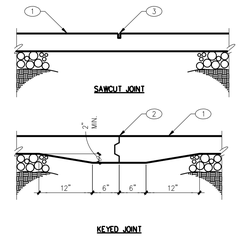

NOTE:
KEYED JOINTS NEED ONLY OCCUR AT EXPOSED EDGES DURING PLACEMENT UNLESS SPECIFICALLY NOTED ON THE PLANS. "TOOL WET JOINT", "ZIP STRIP", ETC. SHALL MATCH SAWCUT REQUIREMENTS.

101 CONTROL JOINTS IN CONCRETE SLAB ON GRADE
03-CS0101 NO SCALE

KEY NOTES:

1. STEEL STUD WALL.
2. CONTINUOUS CONCRETE TURN-DOWN FOOTING.
3. SIDEWALK, PAVEMENT, OR FINISH GRADE PER ARCHITECTURAL DRAWINGS.
4. FINISH SYSTEM PER ARCHITECTURAL DRAWINGS.
5. CONCRETE SLAB ON GRADE.
6. MINIMUM FOOTING DEPTH PER G.S.N.
7. ⅝"ø ANCHOR BOLT AT 32" O.C.
8. #3 L-SHAPED BENT BAR; 16"H., 9"V. AT 48" O.C. (LAP W/ #5 VERTICALS).
9. #5 HOOKED BAR AT 48" O.C. (ALTERNATE BENDS).
10. OPTIONAL COLD JOINT.

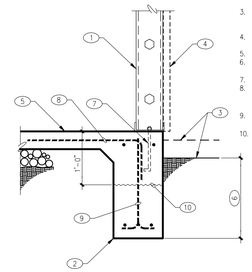

102 PRE-ENGINEERED BUILDING AT CONCRETE FOOTING
08-MB-CF0106 NO SCALE

NOTE:
WALL SIDING AND/OR METAL STUD FRAMING AS OCCURS NOT SHOWN FOR CLARITY. SEE DETAILS **102**, **104** AND ARCHITECTURAL DRAWINGS.

KEY NOTES:

1. STEEL COLUMN.
2. CONCRETE FOOTING.
3. SIDEWALK, PAVEMENT, OR FINISH GRADE PER ARCHITECTURAL DRAWINGS.
4. CONTINUOUS CONCRETE FOOTING – REINFORCING CONTINUOUS FROM BEYOND.
5. ANCHOR BOLTS WITH DOUBLE NUT AT BOTTOM.
6. CENTERLINE OF STEEL COLUMN AND FOOTING.
7. HAIRPIN BAR AS OCCURS.
8. CONCRETE SLAB ON GRADE.
9. MINIMUM FOOTING DEPTH PER G.S.N.
10. OPTIONAL COLD JOINT.
11. (2) #5 BARS ¢" AT 16" (10-5") 6"
    USE WHEN OPTIONAL COLD JOINT IS USED.
12. PORTAL FRAME STEEL COLUMN.

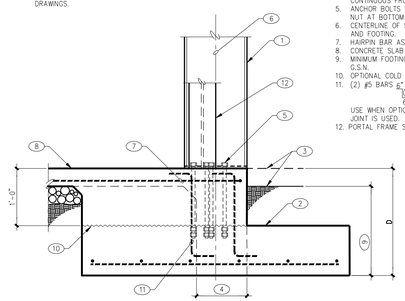

105 STEEL COLUMN AND PORTAL FRAME COLUMN AT CONCRETE FOOTING
08-MB-CF0201 NO SCALE

KEY NOTES:

1. STEEL BUILDING WALL BEYOND.
2. CONTINUOUS CONCRETE TURN-DOWN FOOTING.
3. SIDEWALK, PAVEMENT, OR FINISH GRADE PER ARCHITECTURAL DRAWINGS.
4. CONCRETE SLAB ON GRADE.
5. MINIMUM FOOTING DEPTH PER G.S.N.
6. #3 L-SHAPED BENT BAR; 16"H., 9"V. AT 48" O.C. (LAP W/ #5 VERTICALS).
7. #5 HOOKED BAR AT 48" O.C. (ALTERNATE BENDS).
8. OPTIONAL COLD JOINT.

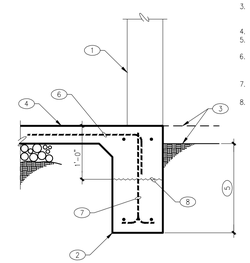

103 STEEL BUILDING WALL AT CONCRETE FOOTING AT OPENING
08-MB-CF0403 NO SCALE

NOTE:
WALL SIDING AND/OR METAL STUD FRAMING AS OCCURS NOT SHOWN FOR CLARITY. SEE DETAILS **102**, **104** AND ARCHITECTURAL DRAWINGS.

KEY NOTES:

1. STEEL COLUMN.
2. CONCRETE FOOTING.
3. SIDEWALK, PAVEMENT, OR FINISH GRADE PER ARCHITECTURAL DRAWINGS.
4. CONTINUOUS CONCRETE FOOTING – REINFORCING CONTINUOUS FROM BEYOND.
5. ANCHOR BOLTS WITH DOUBLE NUT AT BOTTOM.
6. CENTERLINE OF STEEL COLUMN AND FOOTING.
7. HAIRPIN BAR AS OCCURS.
8. CONCRETE SLAB ON GRADE.
9. MINIMUM FOOTING DEPTH PER G.S.N.
10. OPTIONAL COLD JOINT.
11. (2) #5 BARS ¢" AT 16" (10-5") 6"
    USE WHEN OPTIONAL COLD JOINT IS USED.

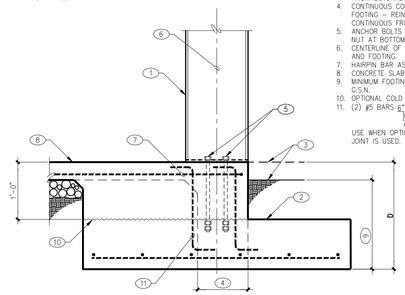

106 STEEL COLUMN AT CONCRETE FOOTING
08-MB-CF0201 NO SCALE

This drawing is the property of FROST Structural Engineering, Inc. Legally, the drawing can NOT be copied in whole or in pieces. It is only to be used for the project and site specifically identified hereon and is not to be used on any other project. Contractor shall carefully review all dimensions, details, and conditions and report at once any error, inconsistency or omission discovered before construction. The contractor assumes full liability for deviations from the intent of these plans.

JOB NO.: 2024-076	PROJECT MANAGER: RKF	CAD OPERATOR: IMC

FROST STRUCTURAL ENGINEERING
1678 Oaklawn Drive, Suite C
Prescott, Arizona 86305
phone: 928.776.4757
info@frost-structural.com
www.frost-structural.com

REVISIONS	BY

These drawings are the property of W. Alan Kenson & Associates P.C., and may not be reproduced in any way without the written consent of W. Alan Kenson & Associates, P.C.

Registered Professional Engineer (Structural) CERTIFICATE NO. 27341 RICHARD K. FROST Date Signed 6.17.24 ARIZONA, U.S.A. EXPIRES 9/30/2026

W. Alan Kenson & Associates, P.C.
P 928-443-5812 P.O. Box 11593
F 928-443-5815 Prescott, AZ 86304
email: waka@cableone.net
www.kenson-associates.com
ARCHITECTURE & PLANNING

DRAWING: FOUNDATION DETAILS 100-SERIES

PROJECT: JSC Contracting Building B
6601 Inter Cal Way
Prescott, AZ 86301

APN: 103-50-054D

CNPLANS_B2407-176 6601 INTER CAL WAY PLANS

DRAWN BY	IMC
CHECKED BY	RKF
DATE	6/17/24
JOB NO.	2024-076
SHEET	S4

Jun 17, 2024 - 6:33pm

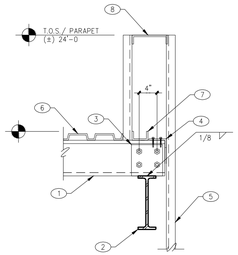

KEY NOTES:

1. STEEL PURLIN.
2. STEEL BEAM.
3. 7"x7"x5/16" THICK STEEL PLATE W/ (4) 3/4"ø A307 BOLTS.
4. CONTINUOUS L4X2X14 GA. W/ (2) #12 TEKS SCREW AT EACH PURLIN.
5. SIDING PER ARCHITECTURAL DRAWINGS.
6. METAL ROOFING PER ARCHITECTURAL DRAWINGS.
7. 3 5/8" METAL STUD TRACK.
8. STEEL GIRT.

211 STEEL PURLIN AT STEEL BEAM
05-SP-SB0401-2
NO SCALE

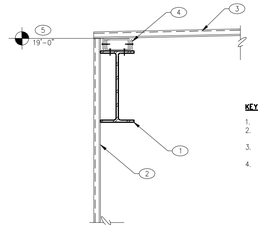

KEY NOTES:

1. STEEL PORTAL BEAM.
2. METAL SIDING PER ARCHITECTURAL DRAWINGS.
3. METAL ROOFING PER ARCHITECTURAL DRAWINGS.
4. (2) 6" TRACK STUDS SCREWED TOGETHER AT FLANGES (6" O.C.) TO FORM BOX MEMBER. FIRST SCREW LOWER TRACK STUD TO SUPPORTING WIDE FLANGE BEAM W/ #10 TEK SCREWS AT 12" O.C. (STAGGERED).
5. ROOF DECK BEARING.

208 STEEL PORTAL BEAM
NO SCALE

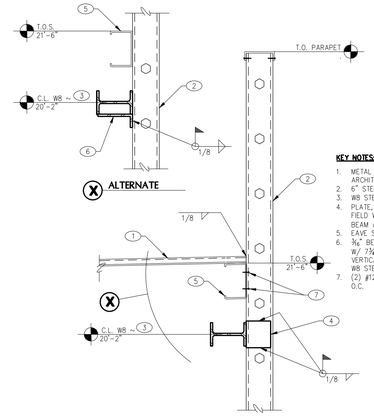

KEY NOTES:

1. METAL ROOFING PER ARCHITECTURAL DRAWINGS.
2. 6" STEEL STUD WALL.
3. W8 STEEL WALL BEAM.
4. PLATE, 3/8" x 6" SQ., SHOP OR FIELD WELD TO W8 STEEL WALL BEAM w/ 3/16" FILLET WELDS.
5. EAVE STRUT.
6. 3/8" BENT PLATE, CONTINUOUS W/ 7 3/4" HORIZONTAL AND 3" VERTICAL LEGS SHOP WELDED TO W8 STEEL WALL BEAM.
7. (2) #12 TEKS SCREWS AT 16" O.C.

204 STEEL BEAM AT STEEL STUD WALL
NO SCALE

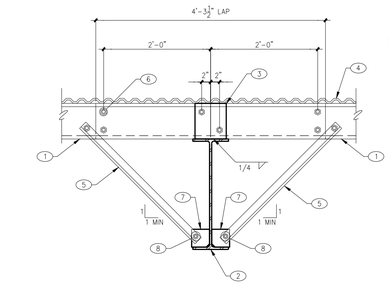

KEY NOTES:

1. STEEL PURLIN.
2. STEEL BEAM.
3. 7"x7"x5/16" THICK PLATE WITH (2) 3/4"ø A307 BOLTS.
4. METAL ROOFING PER ARCHITECTURAL DRAWINGS.
5. STEEL BRACE L2X2X1/4 WITH (1) 3/4"ø A307 BOLT. – SEE PLAN FOR LOCATIONS.
6. (4) 3/4"ø A307 BOLTS AS SHOWN – BOLT GAGES PER PURLIN MANUFACTURER.
7. PLATE 3/8"x4" SQ. – SHOP WELD TO STEEL BEAM W/ 1/4" FILLET WELDS.
8. 5/8"ø A307 THRU-BOLT.

201 STEEL PURLIN AT STEEL BEAM W/ BRACES
NO SCALE

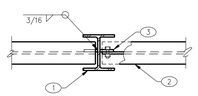

KEY NOTES:

1. STEEL COLUMN.
2. STEEL BEAM. FLANGE SHOWN CUT AWAY FOR CLARITY.
3. 3/8"X4x9" SHEAR PLATE WITH BOLTING PER TYPICAL DETAIL T20.

212 STEEL COLUMN AT STEEL BEAM
NO SCALE

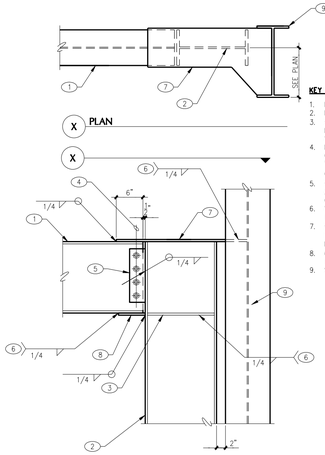

KEY NOTES:

1. PORTAL FRAME STEEL BEAM.
2. PORTAL FRAME STEEL COLUMN.
3. 3/8" THICK FITTED STIFFENER PLATE EACH SIDE OF COLUMN WEB.
4. FOR TYPE, SIZE AND NUMBER OF BOLTS, SEE DETAIL **T20** "BOLT SCHEDULE FOR STEEL CONNECTIONS".
5. 3/8" STEEL SHEAR PLATE OR ALT. DOUBLE CLIP ANGLE CONNECTION.
6. WELD 3 SIDES OF PLATE, TYPICAL.
7. 3/8" THICK STEEL CAP PLATE, 1" WIDER THAN COLUMN OR BEAM.
8. 6" LONG X 8" WIDE X 1/2" THICK STEEL PLATE.
9. STEEL COLUMN.

209 PORTAL FRAME MOMENT CONNECTION
NO SCALE

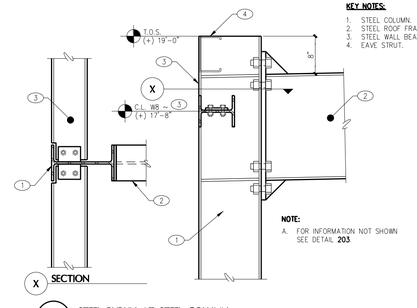

KEY NOTES:

1. STEEL COLUMN.
2. STEEL ROOF FRAME BEAM.
3. STEEL WALL BEAM.
4. EAVE STRUT.

NOTE:

A. FOR INFORMATION NOT SHOWN SEE DETAIL **203**.

205 STEEL PURLIN AT STEEL COLUMN
NO SCALE

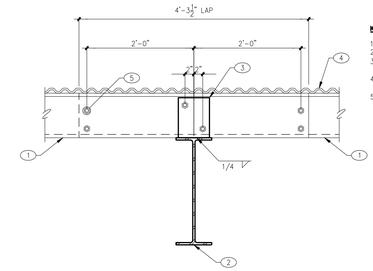

KEY NOTES:

1. STEEL PURLIN.
2. STEEL BEAM.
3. 7"x7"x5/16" THICK PLATE WITH (2) 3/4"ø A307 BOLTS.
4. METAL ROOFING PER ARCHITECTURAL DRAWINGS.
5. (4) 3/4"ø A307 BOLTS AS SHOWN – BOLT GAGES PER PURLIN MANUFACTURER.

202 STEEL PURLIN AT STEEL BEAM
NO SCALE

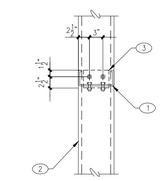

KEY NOTES:

1. STEEL GIRT "C" PER STRUCTURAL ELEVATIONS.
2. STEEL JAMB "C" PER STRUCTURAL ELEVATIONS.
3. L4"x4"x3/8" x 6" LONG W/ (2) 3/4"ø A307 BOLTS TO GIRT AND JAMB.

213 STEEL CEE GIRT AT STEEL CEE JAMB
05-SCG-SCJ0101
NO SCALE

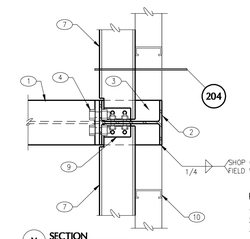

KEY NOTES:

1. STEEL ROOF FRAME BEAM.
2. STEEL COLUMN.
3. 3/8" STIFFENER PLATE EACH SIDE OF WEB.
4. (8) 1 3/8"ø A325 BOLTS.
5. WELD (3) SIDES TYPICAL.
6. 3/8" THICK STIFFENER PLATE.
7. W8 STEEL WALL BEAM.
8. 1"X8"X2'-8" STEEL PLATE.
9. 3/8" THICK SHEAR PLATE SHOP WELDED TO STEEL COLUMN WEB AND INTERIOR FLANGE w/ 1/4" FILLET WELDS ALL AROUND. (2) 3/4"ø A325 BOLTS SHEAR PL. TO W8 STEEL WALL BEAM.
10. 6" STEEL STUD WALL.
11. EAVE STRUT, COPE AS REQUIRED AT STEEL COLUMN.

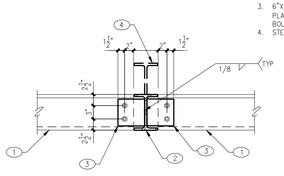

KEY NOTES:

1. STEEL GIRT.
2. STEEL SIDE WALL COLUMN.
3. 6"x6"x3/8" THICK STEEL PLATE W/ (2) 3/8"ø A307 BOLTS.
4. STEEL FRAME COLUMN.

214 STEEL GIRT AT STEEL COLUMN
NO SCALE

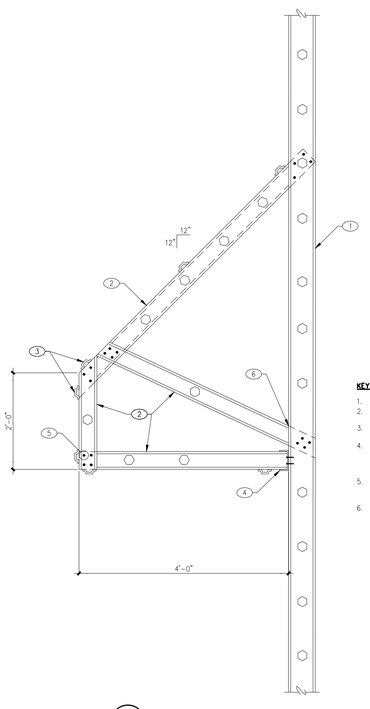

KEY NOTES:

1. 6" STEEL STUD WALL.
2. 3 5/8" STEEL STUD FRAMING FOR AWNING AS SHOWN.
3. SUB GIRTS AS REQUIRED FOR AWNING METAL SIDING.
4. 3 5/8" CONTINUOUS TRACK, MOUNT TO EACH SUPPORTING WALL STUD W/ (2) #10 TEKS SCREWS.
5. (4) #10 TEKS SCREWS AT EACH STUD CONNECTION AS SHOWN.
6. COPE 3 5/8" BRACE STUD FLANGES, SCREW BRACE WEB TO SUPPORTING 6" STUD PER KEYNOTE **5**.

210 AWNING DETAIL
NO SCALE

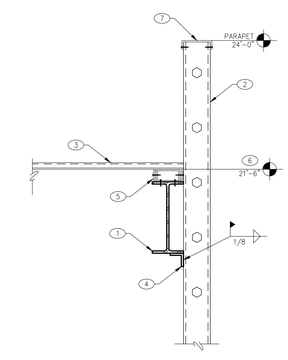

KEY NOTES:

1. STEEL PORTAL BEAM.
2. 6" STEEL STUD WALL.
3. METAL ROOFING PER ARCHITECTURAL DRAWINGS.
4. CONTINUOUS L3X3X3/16, SHOP WELD TO STRUCTURAL PORTAL BEAM.
5. (2) 6" TRACK STUDS SCREWED TOGETHER AT FLANGES (6" O.C.) TO FORM BOX MEMBER. FIRST SCREW LOWER TRACK STUD TO SUPPORTING WIDE FLANGE BEAM W/ #10 TEK SCREWS AT 12" O.C. (STAGGERED).
6. ROOF DECK BEARING.
7. TOP TRACK.

207 STEEL PORTAL BEAM
NO SCALE

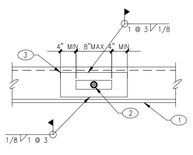

KEY NOTES:

1. WALL GIRT.
2. X-BRACE STEEL ROD OR WIRE ROPE.
3. SLOT GIRT IN FIELD AS REQUIRED. REINFORCE SLOT WITH 3/8"X6" PLATE.

215 X-BRACING AT WALL GIRT
NO SCALE

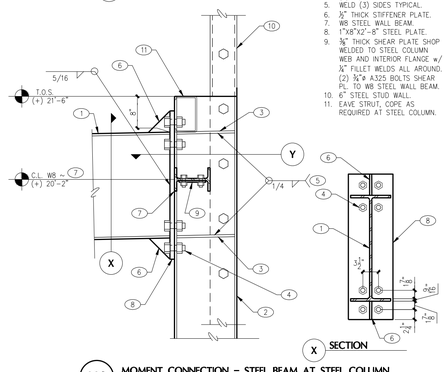

203 MOMENT CONNECTION – STEEL BEAM AT STEEL COLUMN
05-SB-SC0302-4
NO SCALE

This drawing is the property of FROST Structural Engineering, Inc. Legally, the drawing can NOT be copied in whole or in pieces. It is only to be used for the project and site specifically identified hereon and is not to be used on any other project. Contractor shall carefully review all dimensions, details, and conditions and report at once any error, inconsistency or omission discovered before construction. The contractor assumes full liability for deviations from the intent of these plans.

JOB NO.: 2024-076 | PROJECT MANAGER: RKF | CAD OPERATOR: IMC

FROST STRUCTURAL ENGINEERING
1678 Oaklawn Drive, Suite C
Prescott, Arizona 86305
phone: 928.776.4757
info@frost-structural.com
www.frost-structural.com

REVISIONS	BY

These drawings are the property of W. Alan Kenson & Associates P.C., and may not be reproduced in any way without the written consent of W. Alan Kenson & Associates, P.C.

Registered Professional Engineer (Structural) CERTIFICATE NO. 27341 RICHARD K. FROST Date Signed 6.17.24 ARIZONA, U.S.A. EXPIRES 9/30/2026

W. Alan Kenson & Associates, P.C.
P 928-443-5812
F 928-443-5815
P.O. Box 11593
Prescott, AZ 86304
email: waka@cableone.net
www.kenson-associates.com
ARCHITECTURE & PLANNING

REGISTERED PROFESSIONAL ENGINEER

CITY OF PRESCOTT ARIZONA

DRAWING: FRAMING DETAILS 200-SERIES

PROJECT: JSC Contracting Building B
6601 Inter Cal Way
Prescott, AZ 86301

APN: 103-50-054D

CNPLANS_B2407-176 6601 INTER CAL WAY PLANS

DRAWN BY	IMC
CHECKED BY	RKF
DATE	6/17/24
JOB NO.	2024-076
SHEET	S5

Jun 17, 2024 - 6:33pm

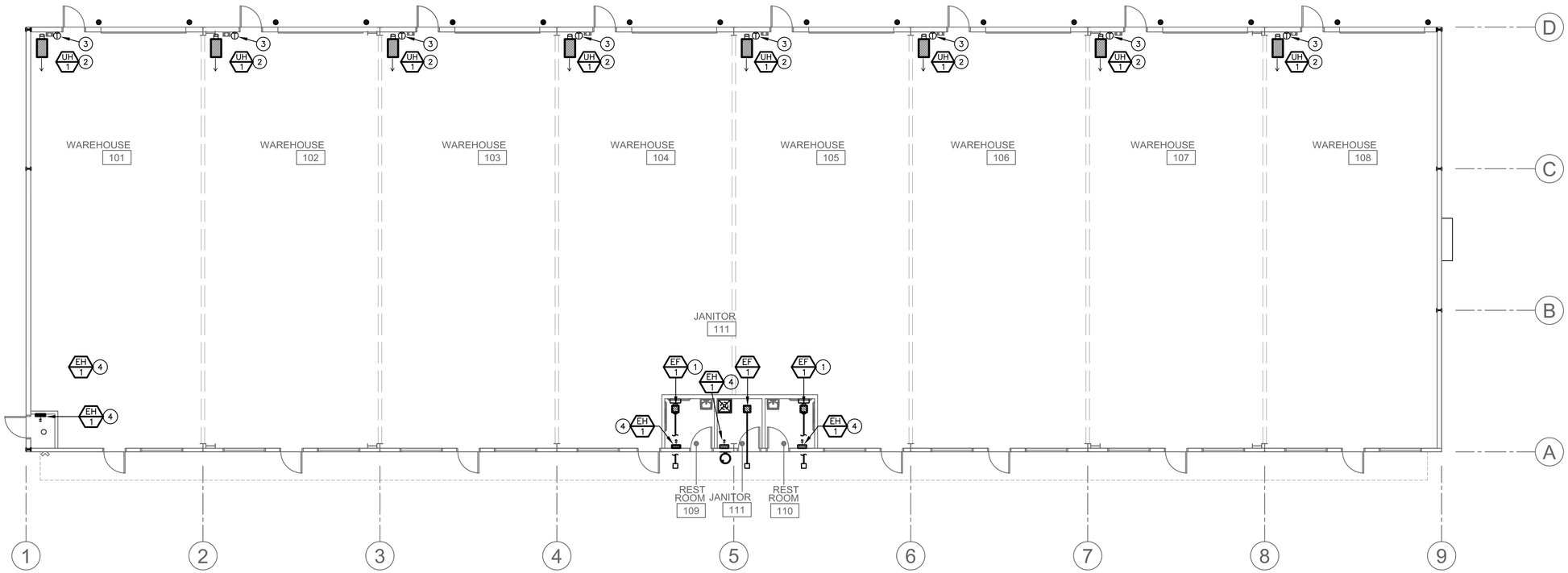

A1 Mechanical Plan

Scale: 1/8"=1'-0"

Plan North

KEYNOTES

1. CEILING MOUNTED EXHAUST FAN WITH BACKDRAFT DAMPER. TRANSITION EXHAUST DUCT FROM UNIT DISCHARGE AND ROUTE TO MANUFACTURER'S SOFFIT DISCHARGE. MAINTAIN A MINIMUM 10' CLEARANCE FROM ALL OUTSIDE AIR INTAKES.
2. GAS-FIRED UNIT HEATER SUPPORTED FROM STRUCTURE, WITH TYPE "B" FLUE UP THROUGH ROOF. COORDINATE UNIT HEATER MOUNTING HEIGHT.
3. PROVIDE UNIT HEATER WITH LOW VOLTAGE THERMOSTAT WITH INSULATED SUB-BASE.
4. ELECTRIC HEATER WITH INTEGRAL THERMOSTAT.

May 10, 2024 - 1:17pm

OSE Design Group, LLC
Consulting Engineers

611 West Delano Ave
Prescott, AZ 86301
(602) 499.0001

Project #24027

10922 N. 153rd Ln.
Surprise, AZ 85379
(623) 444-6143

REVISIONS	BY

These drawings are the property of W. Alan Kenson & Associates P.C., and may not be reproduced in any way without the written consent of W. Alan Kenson & Associates, P.C.

Registered Professional Engineer (Mechanical)
33491
WILLIAM MARK ODELL
Date Signed 06/17/24
ARIZONA U.S.A.

W. Alan Kenson & Associates, P.C.
P 928-443-5812
F 928-443-5815
P.O. Box 11593
Prescott, AZ 86304
email: waka@cableone.net
www.kenson-associates.com
ARCHITECTURE & PLANNING

CITY OF PRESCOTT ARIZONA

DRAWING: Mechanical Floor Plan

PROJECT: JSC Contracting Building B
6601 Inter Cal Way
Prescott, AZ 86301

APN: 103-50-054D

CNPLANS_B2407-178 6601 INTER CAL WAY PLANS

DRAWN BY
CHECKED BY
DATE March 6th, 2024
JOB NO. 799
SHEET M1.0

MECHANICAL SPECIFICATIONS

DRAWINGS AND DATA
DRAWINGS ARE GENERALLY DIAGRAMMATIC AND ARE INTENDED TO CONVEY SCOPE OF WORK AND TO INDICATE GENERAL ARRANGEMENT OF EQUIPMENT. THEY ARE NOT INTENDED TO SHOW EVERY OFFSET OR FITTINGS OR EVERY STRUCTURAL DIFFICULTY THAT MAY BE ENCOUNTERED DURING INSTALLATION OF THE WORK. LOCATION OF ALL ITEMS NOT DEFINITELY FIXED BY DIMENSIONS ARE APPROXIMATE ONLY. EXACT LOCATIONS NECESSARY TO SECURE BEST CONDITIONS AND RESULTS MUST BE DETERMINED AT PROJECT AND SHALL HAVE APPROVAL OF ARCHITECT BEFORE BEING INSTALLED. DO NOT SCALE DRAWINGS. IF SO DIRECTED BY ARCHITECT, WITHOUT EXTRA CHARGE, MAKE REASONABLE MODIFICATIONS IN LAYOUT AS NEEDED TO PREVENT CONFLICT WITH WORK OF OTHER TRADES OR FOR PROPER EXECUTION OF WORK. INCLUDE MINOR DETAILS NOT USUALLY SHOWN OR SPECIFIED, BUT NECESSARY FOR PROPER INSTALLATION AND OPERATION OF A SYSTEM OR PIECE OF EQUIPMENT.

CODES
INCLUDE IN WORK, WITHOUT EXTRA COST TO OWNER, LABOR, MATERIALS, SERVICES, APPARATUS, DRAWINGS (IN ADDITION TO CONTRACT DRAWINGS AND DOCUMENTS) REQUIRED TO COMPLY WITH APPLICABLE LAWS, ORDINANCES, RULES AND REGULATIONS. DRAWINGS AND SPECIFICATIONS TAKE PRECEDENCE WHEN THEY ARE MORE STRINGENT THAN CODES, ORDINANCES, STANDARDS AND STATUTES. CODES, ORDINANCES, STANDARDS AND STATUES TAKE PRECEDENCE WHEN THEY ARE MORE STRINGENT OR CONFLICT WITH DRAWINGS OR SPECIFICATIONS. FOLLOWING INDUSTRY STANDARDS, SPECIFICATIONS AND CODES ARE MINIMUM REQUIREMENTS:

A. APPLICABLE CITY, COUNTY, AND STATE MECHANICAL, ELECTRICAL, GAS, PLUMBING, HEALTH AND SANITARY CODES, LAWS AND ORDINANCES.
B. UNDERWRITER'S LABORATORIES, INC. STANDARDS.
C. 2018 INTERNATIONAL RESIDENTIAL CODE WITH LOCAL AMENDMENTS.
D 2018 INTERNATIONAL PLUMBING CODE WITH STATE AMENDMENTS.
E. 2018 INTERNATIONAL MECHANICAL CODE WITH STATE AMENDMENTS.
F. 2017 NEC
G. 2018 INTERNATIONAL FUEL GAS CODE WITH STATE AMENDMENTS.

GENERAL
THE WORK INCLUDED UNDER THIS SECTION CONSISTS OF FURNISHING ALL LABOR, MATERIALS, AND EQUIPMENT TO PROVIDE A COMPLETE FUNCTIONING HVAC SYSTEM AS SHOWN ON THE DRAWINGS AND SPECIFIED HEREIN. THE SYSTEM SHALL INCLUDE REQUIRED UNITS, DUCTWORK, FANS AND ALL APPURTENANCES AS REQUIRED. INSTALL MATERIAL AND EQUIPMENT IN ACCORDANCE WITH MANUFACTURER'S RECOMMENDATIONS.

INSTRUCT THE OWNER AS TO PROPER OPERATION AND CARE OF THE EQUIPMENT AFTER START-UP AND CHECK-OUT. PROVIDE THE OWNER WITH ALL WARRANTY AND OPERATING INSTRUCTIONS AT THE COMPLETION OF THE PROJECT.

GUARANTEE
EACH COMPLETE SYSTEM GUARANTEED BY CONTRACTOR FOR A PERIOD OF ONE YEAR, FROM DATE OF ACCEPTANCE OF WORK BY OWNER IN WRITING, TO BE FREE OF DEFECTS OF MATERIALS AND WORKMANSHIP, AND TO PERFORM SATISFACTORILY UNDER ALL CONDITIONS OF LOAD OR SERVICE. THE GUARANTEES PROVIDE THAT ANY ADDITIONAL CONTROLS, PROTECTIVE DEVICES, OR EQUIPMENT BE PROVIDED AS NECESSARY TO MAKE THE SYSTEM OF EQUIPMENT OPERATE SATISFACTORILY, AND THAT ANY FAULTY MATERIALS OR WORKMANSHIP BE REPLACED OR REPAIRED.

REGULATIONS, PERMITS & INSPECTIONS
COMPLY WITH ALL APPLICABLE CODES, RULES AND REGULATIONS. ALL MATERIALS, EQUIPMENT AND WORK MUST CONFORM TO THE INTERNATIONAL RESIDENTIAL CODE. OBTAIN AND PAY FOR ALL REQUIRED PERMITS AND LICENSES. WHEN REQUIRED BY CODE, ALL WORK MUST BE INSPECTED AND APPROVED BY LOCAL AUTHORITIES.

DUCTWORK
ALL DUCTWORK TO BE GALVANIZED LOCK FORMING SHEET METAL. SIZES SHOWN ARE CLEAR INSIDE DIMENSIONS. CONSTRUCT ALL DUCTWORK AND FITTINGS TO PROVIDE MINIMUM RESISTANCE AND NOISE LEVELS. DUCTWORK SHALL BE FABRICATED AND INSTALLED BY SKILLED MECHANICS IN A WORKMANLIKE MANNER USING THE LATEST EDITION OF THE "SMACNA" MANUAL AS A GUIDELINE. SEAL ALL SUPPLY AIR DUCTWORK AND RETURN AIR PLATFORMS/PLENUMS AIRTIGHT WITH APPROVED DUCT SEALER. TURNING VANES SHALL BE INSTALLED IN ALL MITERED ELBOWS.

GRILLES AND DIFFUSERS
ACCEPTABLE MANUFACTURERS ARE TITUS, ANEMOSTAT, KRUEGER, CARNES, BARBERCOMAN, AGITAIR, E.A.P.C., METAL-AIR OR HART AND COOLEY. CONFIRM FINISHED AND COLOR WITH ARCHITECT. ALL GRILLES AND DIFFUSERS SHALL BE SUBMITTED TO ARCHITECT FOR FINAL APPROVAL.

EXHAUST FANS
FURNISH AND INSTALL EXHAUST FANS AS REQUIRED BY ARCHITECTURAL DRAWINGS. PROVIDE FANS WITH FACTORY ROOF OR WALL CAPS AS SHOWN. PROVIDE ALL EXHAUST FANS WITH BACKDRAFT DAMPER. MAXIMUM NOISE RATING 4.0 SONES. ACCEPTABLE MANUFACTURER'S ARE "BROAN", "NUTONE" OR "GREENHECK" OR AS APPROVED BY ARCHITECT.

INSTRUCTIONS/O&M MANUAL

THE CONTRACTOR SHALL INSTRUCT THE OWNER IN THE PROPER OPERATION AND MAINTENANCE OF ALL INSTALLED HVAC EQUIPMENT. THE CONTRACTOR SHALL PROVIDE A MINIMUM OF TWO (2) BOUND OPERATING AND MAINTENANCE MANUALS TO THE OWNER AT THE COMPLETION OF THE PROJECT. THE MANUAL SHALL INCLUDE: CONTROL AND/OR INTERLOCK WIRING DIAGRAMS, SEQUENCE OF OPERATION, PREVENTATIVE MAINTENANCE ITEMS, AND A PARTS LIST WITH THE NOMENCLATURE, MAINTENANCE SCHEDULE, AND NAME, ADDRESS AND PHONE NUMBER OF THE LOCAL PRODUCT REPRESENTATIVE.

UNIT HEATER SCHEDULE

EQUIP. NO.	MANUFACTURER	MODEL NO.	BLOWER			MOTOR		HEATER				FLUE (DIA.)	WT. (LBS)	REMARKS
			CFM	ESP	MIN. THROW	HP	VOLTS/ PHASE	FUEL	EFF.	MAX. INPUT MBH	MIN. OUTPUT MBH			
1	REZNOR	UDX-75	961	0	x	0.06	120/1	NAT. GAS	83%	60,000	49,800	4" RD	76	1 2 3 4

1. PROVIDE UNIT HEATER WITH LOW VOLTAGE THERMOSTAT WITH INSULATED SUB-BASE, W/ LOCKING COVER.
2. PROVIDE UNIT WITH ELECTRONIC SPARK IGNITION.
3. PROVIDE UNIT WITH OPTIONAL HANGER KIT.
4. INPUT RATINGS SHOWN HAVE BEEN DERATED FOR 5,000 FT ELEVATION. INPUT RATE CHANGES FROM STANDARD CAN BE MADE BY ADJUSTING MANIFOLD PRESSURE (MIN 3.0 – MAX 3.7) OR BY CHANGING ORIFICE.

EXHAUST FAN SCHEDULE

MARK	SERVES	MANUF.	MODEL	CFM	E.S.P. (in. wg)	MOTOR		DRIVE	SONES	WEIGHT LBS	REMARKS
						HP OR WATTS	V/PH				
1	RESTROOM	GREENHECK	SP-B90	75	.125	54 WATTS	120/1	DIRECT	2.0	10	1 2

1. UNIT TO OPERATE VIA WALL SWITCH.
2. PROVIDE #EL-10x3 SOFFIT DISCHARGE PER PLANS

ELECTRIC HEATER SCHEDULE

EQUIP. NO.	MANUFACTURER	MODEL NO.	TYPE	SERVICE/ LOCATION	BLOWER CFM	HEATER KW	VOLTS/ PHASE	AMPS	REMARKS
1	QMARK	GFR1500F	WALL HEATER	RISER ROOM	150	0.50	120/1	12.5	1 2

1. INTEGRAL THERMOSTAT.
2. PROVIDE WITH SURFACE MOUNTING FRAME.

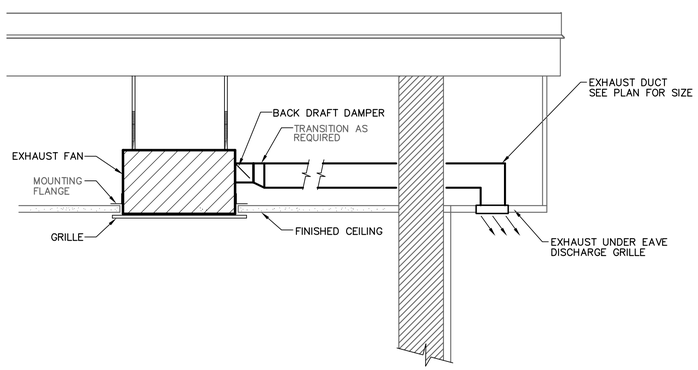

CEILING EXHAUST FAN DETAIL

NOT TO SCALE

1 / M2.0

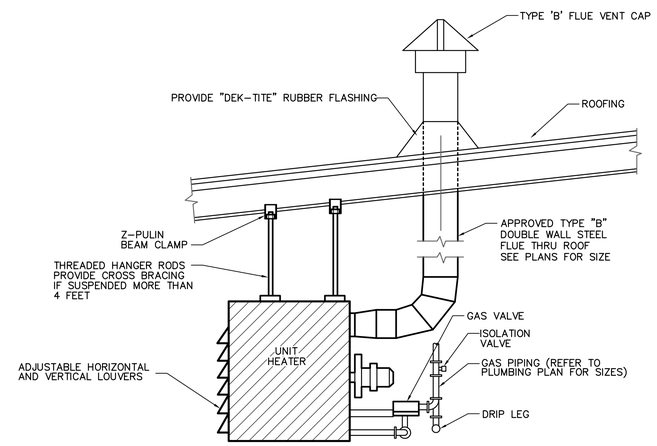

GAS FIRED UNIT HEATER

2 / M2.0

OSE Design Group, LLC
Consulting Engineers
611 West Delano Ave
Prescott, AZ 86301
(602) 499.0001
Project #24027
10922 N. 153rd Ln.
Surprise, AZ 85379
(623) 444-6143

May 10, 2024 - 1:17pm

REVISIONS	BY

These drawings are the property of W. Alan Kenson & Associates P.C., and may not be reproduced in any way without the written consent of W. Alan Kenson & Associates, P.C.

Registered Professional Engineer (Civil) CERTIFICATE NO. 33491 WILLIAM MARK ODELL Date Signed 06/17/24 ARIZONA U.S.A.

W. Alan Kenson & Associates, P.C.
P 928-443-5812
F 928-443-5815
P.O. Box 11593
Prescott, AZ 86304
email: waka@cableone.net
www.kenson-associates.com
ARCHITECTURE & PLANNING

DRAWING: Mechanical Schedules
PROJECT: JSC Contracting Building B
6601 Inter Cal Way
Prescott, AZ 86301
APN: 103-50-054D

~~CNPLANS- B2407-170 6601 INTER CAL WAY PLANS~~

DRAWN BY	
CHECKED BY	
DATE	March 6th, 2024
JOB NO.	799
SHEET	M2.0

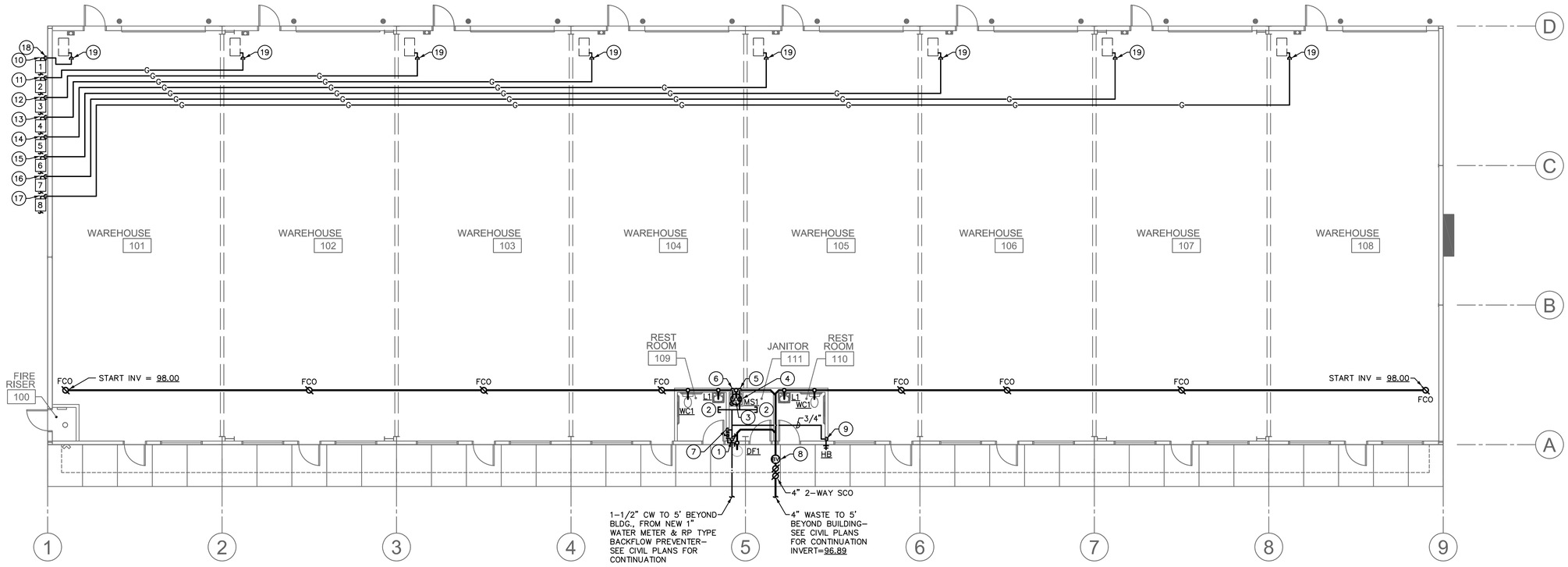

NOTE:
SLOPE ALL HORIZONTAL WASTE PIPING AS FOLLOWS:

FOR PIPE SIZES UP THROUGH 3", SLOPE AT 1/4" PER FT.

FOR PIPE SIZES 4" & ABOVE, SLOPE AT 1/8" PER FT.

A1 Plumbing Plan

Scale: 1/8"=1'-0"

Plan North

KEYNOTES:

1. 1-1/2" CW RISE FROM BELOW GRADE TO ROUTE AT CEILING. PROVIDE BALL VALVE (BUILDING SHUTOFF) ON RISER AT +6" A.F.F.; PROVIDE PRESSURE REDUCING VALVE (PRV) SET AT 80 PSI ON RISER AT +12" A.F.F.
2. PROVIDE 1-1/4" CAPPED CW LINE ABOVE CEILING FOR FUTURE TENANT IMPROVEMENTS.
3. 3/4" H & CW DOWN TO WATER HEATER.
4. ELECTRIC WATER HEATER MOUNTED ON SHELF ABOVE MOP SINK- SEE DETAIL & SCHEDULE, SHEET P2.0. PROVIDE FULL SIZE P & T RELIEF DRAIN LINE, TERMINATE AT +2" ABOVE MOP SINK RIM WITH 90° ELBOW DOWN.
5. 1" CW DOWN TO 1" HEADER, WITH 1/2" TO MOP SINK, 1/2" TO EACH LAV & 1/2" TO EACH WC.
6. 3/4" HW DOWN TO 3/4" HEADER, WITH 1/2" TO MOP SINK & 1/2" TO EACH LAV.
7. 1/2" CW DOWN TO DRAIN-DOWN SYSTEM IN WALL WITH ACCESS PANEL, WITH 1/2" CW OUT OF DRAIN-DOWN TO DRINKING FOUNTAIN. SEE DETAIL, THIS SHEET.
8. PROVIDE BACKWATER VALVE TO COMPLY WITH CITY OF PRESCOTT REQUIREMENTS. PROVIDE TRAFFIC RATED COVER.
9. 3/4" CW DOWN TO NON FREEZE HOSE BIBB.
10. GAS METER #1 BY GAS CO. (60 CFH, 24' TOTAL DEV. LENGTH. SERVES SPACE 101. SEE 1/P3.2 FOR DIAGRAM.
11. GAS METER #2 BY GAS CO. (60 CFH, 48' TOTAL DEV. LENGTH. SERVES SPACE 102. SEE 2/P3.2 FOR DIAGRAM.
12. GAS METER #3 BY GAS CO. (60 CFH, 76' TOTAL DEV. LENGTH. SERVES SPACE 103. SEE 3/P3.2 FOR DIAGRAM.
13. GAS METER #4 BY GAS CO. (60 CFH, 104' TOTAL DEV. LENGTH. SERVES SPACE 104. SEE 4/P3.2 FOR DIAGRAM.
14. GAS METER #5 BY GAS CO. (60 CFH, 132' TOTAL DEV. LENGTH. SERVES SPACE 105. SEE 5/P3.2 FOR DIAGRAM.
15. GAS METER #6 BY GAS CO. (60 CFH, 160' TOTAL DEV. LENGTH. SERVES SPACE 106. SEE 6/P3.2 FOR DIAGRAM.
16. GAS METER #7 BY GAS CO. (60 CFH, 188' TOTAL DEV. LENGTH. SERVES SPACE 107. SEE 7/P3.2 FOR DIAGRAM.
17. GAS METER #8 BY GAS CO. (60 CFH, 216' TOTAL DEV. LENGTH. SERVES SPACE 108. SEE 8/P3.2 FOR DIAGRAM.
18. GAS OUT OF METER, RISE ALONG EXTERIOR WALL TO ENTER BUILDING AT CEILING (TYPICAL OF 8).
19. GAS DOWN TO VALVED CONNECTION TO UNIT HEATER. PROVIDE LUB. GAS COCK & 5" DIRT LEG AT UNIT CONNECTION.

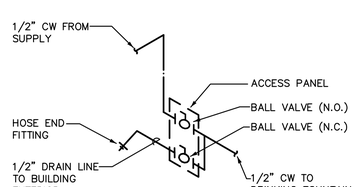

DRAIN DOWN SYSTEM DETAIL FOR DRINKING FOUNTAIN

NTS

NOTE:
SEE WASTE & VENT SCHEMATICS, SHEET P3.0 FOR COMPLETE WASTE & VENT PIPE SIZING.

SEE GAS PIPING DIAGRAMS, SHEET P3.0 FOR COMPLETE GAS PIPE SIZING.

PLUMBING NOTES:

1. WATER PIPING LOCATED IN EXTERIOR WALLS SHALL BE INSTALLED ON THE BUILDING INTERIOR SIDE OF THE BLDG. INSULATION.
2. EXTERIOR WATER PIPING SHALL BE INSTALLED BELOW FROST LINE.

PLUMBING LEGEND

SYMBOL	ABBR.	DESCRIPTION
	W	DRAIN OR WASTE PIPING
	V	VENT PIPING
	CW	COLD WATER PIPING
	HW	HOT WATER PIPING
	G	NATURAL GAS PIPING
	BV	BALL VALVE
	FCO	FLOOR CLEANOUT
	SCO	SURFACE CLEANOUT
	WCO	WALL CLEANOUT
	VTR	VENT THRU ROOF

OSE Design Group, LLC
Consulting Engineers
611 West Delano Ave
Prescott, AZ 86301
(602) 499.0001
Project #24027
10922 N. 153rd Ln.
Surprise, AZ 85379
(623) 444-6143

REVISIONS	BY

These drawings are the property of W. Alan Kenson & Associates P.C., and may not be reproduced in any way without the written consent of W. Alan Kenson & Associates, P.C.

Registered Professional Engineer (Civil)
33491
WILLIAM MARK ODELL
Date Signed 06/17/24
ARIZONA U.S.A.

W. Alan Kenson & Associates, P.C.
P 928-443-5812
F 928-443-5815
P.O. Box 11593
Prescott, AZ 86304
email: waka@cableone.net
www.kenson-associates.com
ARCHITECTURE & PLANNING

DRAWING: Plumbing Floor Plan

PROJECT: JSC Contracting Building B
6601 Inter Cal Way
Prescott, AZ 86301

APN: 103-50-054D

~~CNPLANS-B2407-176-6601 INTER-CAL WAY PLANS~~

DRAWN BY	
CHECKED BY	
DATE	March 6th, 2024
JOB NO.	799
SHEET	P1.1

May 10, 2024 - 1:17pm

PLUMBING SPECIFICATIONS:

1. GENERAL

1..1 Scope: Work under this section includes coordinating and furnishing all labor and material necessary to install a complete plumbing system as shown and specified and in accordance with the codes. Contractor shall pay for all permits, meters, fees, city inspections, legal notices, etc., as required.

1..2 Submittals: Within 15 days after award of contract, submit 8 copies of all items.

1..3 Record Drawings: Provide a set to the Architect at completion of project.

1..4 Instructions: Provide maintenance manual and instruct Owner in the proper operation and maintenance of the equipment.

1..5 Guarantee: One year on labor, material and equipment.

2. PRODUCTS

2..1 Piping:

2..1.1 Water Lines:

2..1.1.1 Copper: Type "L" hard drawn, conforming to ASTM B88, for all water pipe not set under concrete or in the ground.

2..1.1.2 Copper: Type "K" soft drawn, conforming to ASTM B88, for water pipe set in or under concrete or in the ground. Wrap lines below concrete floors with 20 mils of polykon tape.

2..1.1.3 Fittings: Wrought copper conforming to ANSI B16.22.

2..1.1.4 Plastic: If permitted by Administrative Authority, IAPMO approved, NSF–61 listed, crosslinked polyethylene (PEX) tubing, equal to Wirsbo "AQUAPEX" system is acceptable for potable water piping.

2..1.2 Sanitary Waste and Vent Lines:

2..1.2.1 Cast Iron conforming to CISPI Standard 301–95 and ASTM A–888 for all no–hub pipe and fittings installed above and below grade.

2..1.2.2 Galvanized Iron: Standard weight, Schedule 40 galvanized iron conforming to ASTM A–120 for all vent lines 2–1/2" or smaller.

2..1.2.3 Fittings (Waste and Vent System, no–hub cast iron): No–hub cast iron drainage pattern fittings conforming to CISPI #301–95.

2..1.2.4 Fittings (Waste and Vent, galvanized steel): Threaded cast iron fittings conforming to ANSI B16.4.

2..1.2.5 Couplings (Waste and Vent, above and below grade): Double band, stainless steel couplings conforming to CISPI 310–95, with neoprene gasket conforming to ASTM Standard C564 (NOTE: Screened stainless shield is not approved).

2..1.2.6 Plastic: Subject to Owner approval, PVC piping conforming to ASTM D–2665–88 is acceptable for sanitary waste piping installed below grade or slab. Fittings: Drainage fittings to match pipe.

2..1.3 Gas Piping:

2..1.3.1 Gas Piping, interior above slab: Schedule 40 black steel conforming to ASTM A53. Fittings shall conform to the following:

2..1.3.1.1 Pipe 1–1/2" and Smaller: 150 psi, black malleable iron, conforming to ANSI B16.3, 150 psi SWP.

2..1.3.1.2 Pipe 2" and Larger: Black steel seamless welding fittings conforming to ANSI B16.9 and USAS B16.25, 150 psi SWP.

2..1.3.1.3 Unions: Black malleable iron screwed connections, ground iron–to–bronze seat, conforming to ASTM A47, 250 psi SWP.

2..1.3.1.4 Flanges: Black forged steel with weld neck flanges conforming to ANSI B16.5, 150 psi SWP.

2..1.3.2 Gas Piping, above grade or slab, exterior: Schedule 40 galvanized steel, conforming to ASTM A53. Fittings: 150# galvanized steel screwed fittings.

2..2 Pipe Hangers and Supports: Fee & Mason Figure 103 clevis hanger for insulated pipe and Figure 104 clevis hanger for cast iron pipe. Install #500 Trisolators on uninsulated copper lines at all hangers and wall penetrations.

2..3 Pipe Insulation: Use fiberglass premolded insulation with all–service jacket, minimum density of 3.5 pcf. Provide an additional 8–ounce canvas jacket with Arabol finish around all exposed pipe insulation. Cover fittings and valves (except unions) with insulation cement worked on in two applications to a smooth, hard surface, flush with pipe covering. Provide 8" long, 20 gauge, galvanized iron metal insulation guards at locations of hanger rods and supports. Provide 12" long rigid insulation blocks on bottom half of pipe 1" and larger at hangers. Insulation wall thickness shall conform to the following schedule:

Domestic Hot Water and Hot Water Recirculating Lines:

Mains and horizontal branches – 1" thickness.
Drops in walls and partitions – 1/2" thickness.

2..4 Valves:

2..4.1 Gate Valves: Milwaukee 115, 125#, bronze body, solder type gate valve with nonrising stem for all lines up through 3" size.

2..4.2 Check Valves: Milwaukee #1509, 125#, bronze body, solder joint check valve with horizontal bronze disc for all valves up to 2" size. Milwaukee #F2974, 125#, iron body, bronze trimmed, flanged horizontal check valve for all valves larger than 2" size.

2..4.3 Shutoff Valve: Milwaukee BB1–350 bronze body, solder joint valve for all lines up through

2..4.4 Gas Valves, 3/4" and Smaller: Milwaukee BB–1–102.

2..4.5 Gas Valves, 1" to 1–1/2": Rockwell–Nordstrom #142 with #555 lubricant for natural gas service.

2..4.6 Gas Valves, 2" and Larger: Rockwell–Nordstrom #143 with #555 lubricant for natural gas service.

2..5 Cleanouts:

2..5.1 Concrete and Tile Floors: J.R. Smith 4023, with scoriated nickel–bronze top.

2..5.2 Cleanouts (exposed vertical piping): J.R. Smith 4512 cast iron branch cleanout tee with bronze plug.

2..5.3 Interior Finished Walls: J.R. Smith 4532.

2..5.4 Exterior Surface Cleanouts: J.R. Smith 4253. Provide 18" x 18" x 6" concrete pad at landscape areas; provide concrete ring below grade at asphalt areas.

2..5.5 Provide all cleanouts with heavy threaded bronze plugs.

2..6 Acceptable Manufacturers: The following is a list of manufacturers whose equipment is acceptable as to manufacturer, subject to conformance with all drawings, specifications and addenda items:

Plumbing Fixtures: American Standard, Kohler, Eljer.

Stainless Steel Sinks: Just, Elkay, Moen.

Mop Sinks: Fiat, Swan, Mustee.

Electric Water Heaters: Rheem, A.O. Smith, American Mor–Flo.

Valves: Crane, Kennedy, Stockham, Grinnell, Milwaukee, Wolverine.

Hose Bibbs: Acorn, Chicago, Woodford.

P–Traps: Crane. Kohler, Eljer, Frost, McGuire.

Supply Fittings: Chicago, American Standard, Eljer, Speakman, Kohler.

Supply Stops: Eastman, Kohler, Eljer, Brasscraft, McGuire.

Closet Seats: Sperzel, Olsonite, Beneke, Bemis.

Drains and Cleanouts: J. R. Smith, Zurn, Josam, Wade, Western.

Hangers: Grinnell, Fee & Mason, Elcen, Kin–Line, F & S, B–Line, Michigan.

2.7 Plumbing Fixtures: Use polished chrome–plated, adjustable brass P–traps with wall escutcheons at all exposed locations. Use polished chrome–plated faucets with removable trim, brass body and brass handles. Fixtures and supply fitting shall be of one manufacturer. Provide diaphragm type, polished chrome–plated flush valves with integral vacuum breakers and screwdriver stops. Provide fixture stops or valves ahead of all equipment or fixtures. After fixtures are set in place and secured to walls, caulk all around between fixtures and wall with either Dow Corning #780 or G.E. Construction Sealant white silicone caulking compound. See Plumbing Fixture Specification Schedule for complete fixture specifications.

3. EXECUTION

3..1 Tests and Inspections:

3..1.1 All work to be tested and approved before covering as directed by Architect. Remake all leaking joints.

3..1.2 Water System: 125 psi hydrostatic pressure held for four hours.

3..1.3 Sanitary Waste and Vent System: Fill with water to highest point in the system and let stand without loss for two hours.

3..1.4 Gas System: Hold at 50 psi pneumatic for four hours with no pressure loss.

3..1.5 Sterilization (Domestic Water System): After tests have been completed, the entire domestic water distribution system shall be thoroughly flushed with water until all entrained dirt and mud have been removed, and shall be sterilized with solutions of either liquid chlorine conforming to Federal Specification BB–B–120 or hypochlorite conforming to Fed. Spec. O–C–114, Type II, Grade G, or Fed. Spec. O–S–602, Grade A or B. The chlorinating material shall provide a dosage of not less than 50 parts per million and shall be introduced into the system in an approved manner, and retained in the system for 8 hours before flushing.

3..2 Flashing, Sleeves and Escutcheon Plates:

3..2.1 Flashing: Supply flashing for all vent pipe and other types of piping through roof to be installed with roofing. Flash vents with Stoneman S1300–4 or with sheet lead weighing not less than 4 pounds per square foot or equal. Extend flashing into roofing at least 10" from vent and turn flashing over and down into vent opening.

3..2.2 Sleeves: Use 20 gauge galvanized steel sleeves around pipes passing through masonry walls and concrete slabs.

3..2.3 Escutcheon Plates: Install cast brass split ring with setscrew at all locations where exposed pipes pass through walls, floors and/or ceilings. Provide polished chrome–plated escutcheons in finished rooms, all others polished brass.

3..3 Electrical: Wiring by Electrical Contractor.

PLUMBING FIXTURE SPECIFICATIONS

	DESCRIPTION
WC1	WATER CLOSET (ADA COMPLIANT): FIXTURE: AMERICAN STANDARD 2386.012, 1.6 GALLONS PER FLUSH, 16–1/2" HIGH RIM, FLOOR MOUNT, VITREOUS CHINA, ELONGATED BOWL. SEAT: CHURCH 9500 WHITE OPEN FRONT SEAT WITH CONCEALED CHECK HINGE & WITHOUT COVER. SUPPLIES: EASTMAN C5CR–20–LK, 1/2" x 3/8" ANGLE STOP WITH FLEXIBLE TUBE RISER.
L1	LAVATORY (WALL HUNG– ADA COMPLIANT): FIXTURE: AMERICAN STANDARD, MODEL No. 0355.012, WALL HUNG, 20" x 18" VITREOUS CHINA, FRONT OVERFLOW. PROVIDE CAST–IRON WALL HANGER BOLTED TO WALL. FAUCET: MOEN 8400 SINGLE LEVER DECK MOUNTED FAUCET WITH BLADE TYPE ADA HANDLE. SUPPLIES: EASTMAN C5RC–15–LK, ANGLE STOPS WITH FLEXIBLE TUBE RISERS. WASTE: McGUIRE 155WC OFFSET WHEELCHAIR LAVATORY STRAINER WITH GRID DRAIN, CAST BRASS ELBOW AND OFFSET TAILPIECE. TRAP: McGUIRE 8902, 1–1/4" x 1–1/2" CAST BRASS P TRAP. INSULATE EXPOSED WATER AND WASTE PIPING WITH TRUEBRO LAV–GUARD INSULATION KIT, MODEL 102, WITH ACCESSORY #105.
MS1	MOP SINK: FIXTURE: FIAT MODEL MSB–2424, 24" x 24" x 10", FLOOR MOUNTED, MOLDED STONE WITH INTEGRAL STAINLESS STEEL STRAINER EXTENSION. FAUCET: CHICAGO FAUCET 897 CHROME–PLATED SUPPLY FITTING WITH INTEGRAL STOPS, VACUUM BREAKER, 3/4" HOSE THREAD, FLEXIBLE 3/4" RUBBER HOSE AND HOSE BRACKET; MOP HANGER; SILICONE SEALANT INSTALLED IN ACCORDANCE WITH MANUFACTURER'S RECOMMENDATIONS. TRAP: PROVIDE 2" TRAP.
S–1	SINK ADA COMPLIANT): FIXTURE: JUST MODEL No. SL–ADA–2125–A–GR, 21" x 25" x 5–1/2" DEEP, 18 GAUGE TYPE 304 STAINLESS STEEL, ADA COMPLIANT SELF RIMMING SINGLE COMPARTMENT SINK WITH 3–HOLE PUNCH. FAUCET: AMERICAN STANDARD "RELIANT+" MODEL 4205.000.F15, POLISHED CHROME PLATED DECK MOUNT SINGLE LEVER FAUCET WITH SWING SPOUT, INTEGRAL HOT LIMIT SAFETY STOP. SUPPLIES: EASTMAN C5RC–20–LK, 1/2" x 3/8" ANGLE STOPS WITH FLEXIBLE TUBE RISERS. STRAINER: JUST J–35 BASKET STRAINER WITH 1–1/2" C.P. TAILPIECE. TRAP: McGUIRE 8912, 1–1/2" x 1–1/2" CAST BRASS P–TRAP WITH CLEANOUT PLUG AND ESCUTCHEON. INSULATE ALL EXPOSED UNDERCOUNTER WATER AND WASTE PIPING WITH PLUMBEREX 2003W "HANDY–SHIELD MAXX" INSULATION COMPLYING WITH ASTM E 84–07/UL 723 CLASS A AND BE LISTED WITH AND MEET UPC/IAPMO. INSULATION MATERIAL SHALL BE U/V INHIBITED WITH ANTIMICROBIAL AND ANTIFUGAL PROPERTIES.
HB	HOSE BIBB (FREEZE PROOF): WOODFORD MODEL No. MB65, CHROME PLATED FINISH, 3/4" HOSE CONNECTION WITH INTEGRAL VACUUM BREAKER, SELF–DRAINING, LOOSE TEE OPERATOR, ENCLOSED IN A FLUSH MOUNTED 14 GAUGE STAINLESS STEEL WALL BOX WITH LOCKABLE COVER.
WH–1	ELECTRIC WATER HEATER: PPROVIDE UL LISTED ELECTRIC WATER HEATER OF SIZE, CAPACITY AND MAKE AS SCHEDULED. HEATER SHALL BE WARRANTED FOR A MINIMUM OF 5 FULL YEARS AFTER FINAL ACCEPTANCE OF THE BUILDING. FURNISH HEATER WITH THE FOLLOWING ACCESSORIES: 1. ASME COMBINATION TEMPERATURE AND PRESSURE RELIEF VALVE RATED IN EXCESS OF HEATER INPUT. RUN FULL SIZE DRAIN TO TERMINATE AS SHOWN ON DRAWINGS. 2. AUTOMATIC THERMOSTAT ACTUATED CONTROLS WITH 100% SHUTOFF. 3. HIGH–LIMIT CONTROLS. 4. TANK DRAIN. 5. BRASS NIPPLES FOR PIPE CONNECTIONS. 6. HEATER SHALL BE FACTORY INSULATED AND SHEET METAL JACKETED.
DF–1	DRINKING FOUNTAIN (ADA COMPLIANT): FIXTURE: MDF MODEL No. 480EZWMSS, WALL MOUNTED BARRIER FREE DRINKING FOUNTAIN, NON–REFRIGERATED, ONE PIECE TYPE 304 SCHEDULE 10 STAINLESS STEEL, WELDED CONSTRUCTION WITH 18 GAUGE POLISHED STAINLESS STEEL RECEPTOR BOWL, STAINLESS STEEL ANTI–SQUIRT BUBBLER HEAD (MOUNTED WITH LOCK NUT AND WASHER TO PREVENT TAMPERING), STAINLESS STEEL PUSH BAR AND HOUSING. ALL WORKING PARTS ACCESSIBLE THROUGH BOWL OF FOUNTAIN. UNIT FURNISHED WITH WATER SUPPLY (REINFORCED NYLOBRAID TUBING, LEAD–FREE AND NSF–61 CERTIFIED WITH 1/2" MIP THREADED INLET WITH STAINLESS STEEL STRAINER). PROVIDE WITH STAINLESS STEEL FITTINGS AND VALVES. UNIT FURNISHED COMPLETE WITH WALL CARRIER PLATE FOR ANCHORING TO A FINISHED WALL. MOUNT AT WHEELCHAIR HEIGHT– REFER TO ARCHITECTURAL DRAWINGS FOR FIXTURE MOUNTING HEIGHT.
IM	ICE MAKER BOX: SPECIALTY PRODUCTS MODEL P4129, WITH ADJUSTABLE FRAME AND VALVE.

ELECTRIC WATER HEATER SCHEDULE

MARK	MANUFAC.	MODEL	STORAGE CAPACITY IN GALS.	KW INPUT	VOLTAGE/ PHASE	GALLON PER HR. REC. AT 100° F T.R.	WATER OUTLET TEMP °F	REMARKS
WH–1	A.O. Smith	DEL–65	6	1.5	120/1	6.2	140	

FIXTURE CONNECTION SCHEDULE

MARK	DESCRIPTION	TRAP SIZE	WASTE	VENT	COLD WATER	HOT WATER	REMARKS
WC–1	WATER CLOSET (ADA)	INT.	3"	2"	1/2"	–	FLUSH TANK, 1.6 GPF, FLOOR MTD.
L–1	LAVATORY (ADA)	1–1/4" x 1–1/2"	2"	1–1/2"	1/2"	1/2"	WALL MOUNTED
S–1	SINK (ADA)	1–1/2"	1–1/2"	1–1/2"	1/2"	1/2"	SINGLE COMPARTMENT
MS–1	MOP SINK	2"	2"	1–1/2"	1/2"	1/2"	FLOOR TYPE
DF–1	DRINKING FOUNTAIN (ADA)	1–1/4" x 1–1/2"	1–1/2"	1–1/2"	1/2"	–	NON–REGRIGERATED
HB–1	HOSE BIBB	–	–	–	3/4"	–	NON–FREEZE TYPE W/ VACUUM BREAKER

WATER CALCULATION:

FIXTURE UNITS = 86 FU / 40 GPM

PIPE LENGTH TAP TO METER	10 FT.
PIPE LENGTH METER TO LAST FIXTURE	294 FT.
VERTICAL PIPE LENGTH TO HIGHEST FIXTURE	5 FT.
TOTAL PIPE LENGTH	309 FT.
FITTING LOSS (10%)	31 FT.
TOTAL DEVELOPED LENGTH	340 FT.

WATER PIPE SIZING CRITERIA

STREET PRESSURE	65.00 PSI*
WATER METER LOSS (1")	8.50 PSI
BACKFLOW PREVENTER LOSS (1")	12.00 PSI
STATIC LOSS (5' x 0.43)	2.20 PSI
FIXTURE LOSS	20.00 PSI
PRESSURE AVAILABLE FOR PIPING	22.30 PSI

22.30 PSI / 340 FEET x 100 = 6.6 PSI MAXIMUM ALLOWABLE DROP PER 100 FEET PIPE LENGTH

*ASSUMED WATER PRESSURE– CONTRACTOR SHALL VERIFY ACTUAL WATER PRESSURE PRIOR TO CONSTRUCTION. IF PRESSURE IS LESS THAN 65 PSI, CONTRACTOR SHALL CONTACT ENGINEER FOR PIPE SIZING EVALUATION. IF PRESSURE EXCEEDS 80 PSI, A PRESSURE REDUCING VALVE SHALL BE PROVIDED. PIPING VELOCITY NOT TO EXCEED 8 FEET PER SECOND.

BRANCH PIPE SIZING CHART FOR 6.6 PSI LOSS

PIPE SIZE	G.P.M.	F.U.(TANK)
1/2"	3	3
3/4"	7	9
1"	16	23
1–1/4"	27	47
1–1/2"	42	97

FIXTURE UNIT CALCULATIONS

DESCRIPTION	QTY	F.U. EACH		TOTAL F.U.	
		WASTE	WATER	WASTE	WATER
WATER CLOSET (F.T.)	2	4	5	8	10
LAVATORY	2	1	2	2	4
MOP SINK	1	2	3	2	3
DRINKING FOUNTAIN	1	1	1	1	1
FUTURE FIXTURES					68
					86

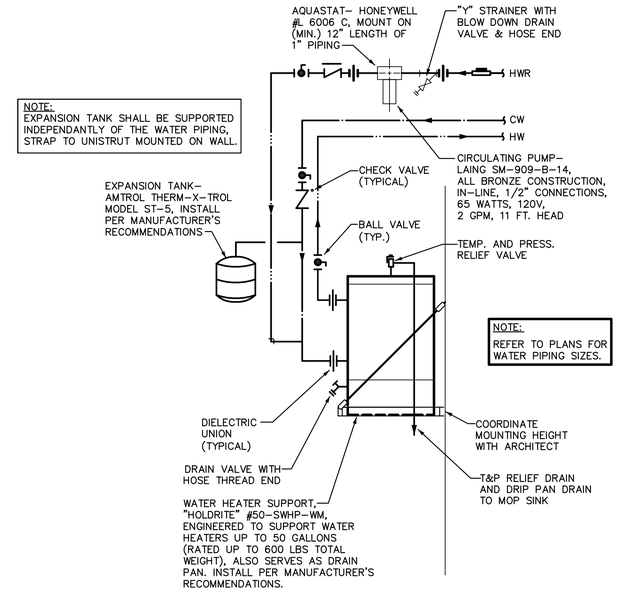

WATER HEATER DETAIL

NTS

OSE Design Group, LLC
Consulting Engineers
611 West Delano Ave
Prescott, AZ 86301
(602) 499.0001
Project #24027
10922 N. 153rd Ln.
Surprise, AZ 85379
(623) 444-6143

REVISIONS	BY

These drawings are the property of W. Alan Kenson & Associates P.C., and may not be reproduced in any way without the written consent of W. Alan Kenson & Associates, P.C.

Registered Professional Engineer (Civil) CERTIFICATE NO. 33491 WILLIAM MARK ODELL Date Signed 06/17/24 ARIZONA U.S.A.

W. Alan Kenson & Associates, P.C.
P 928-443-5812
F 928-443-5815
P.O. Box 11593
Prescott, AZ 86304
email: waka@cableone.net
www.kenson-associates.com
ARCHITECTURE & PLANNING

DRAWING: Plumbing Schedules

PROJECT: JSC Contracting Building B
6601 Inter Cal Way
Prescott, AZ 86301

APN: 103-50-054D

~~CNPLANS–B2407-176-6601 INTER-CAL WAY-PLANS~~

DRAWN BY	
CHECKED BY	
DATE	March 6th, 2024
JOB NO.	799
SHEET	P2.1

May 10, 2024 - 1:17pm

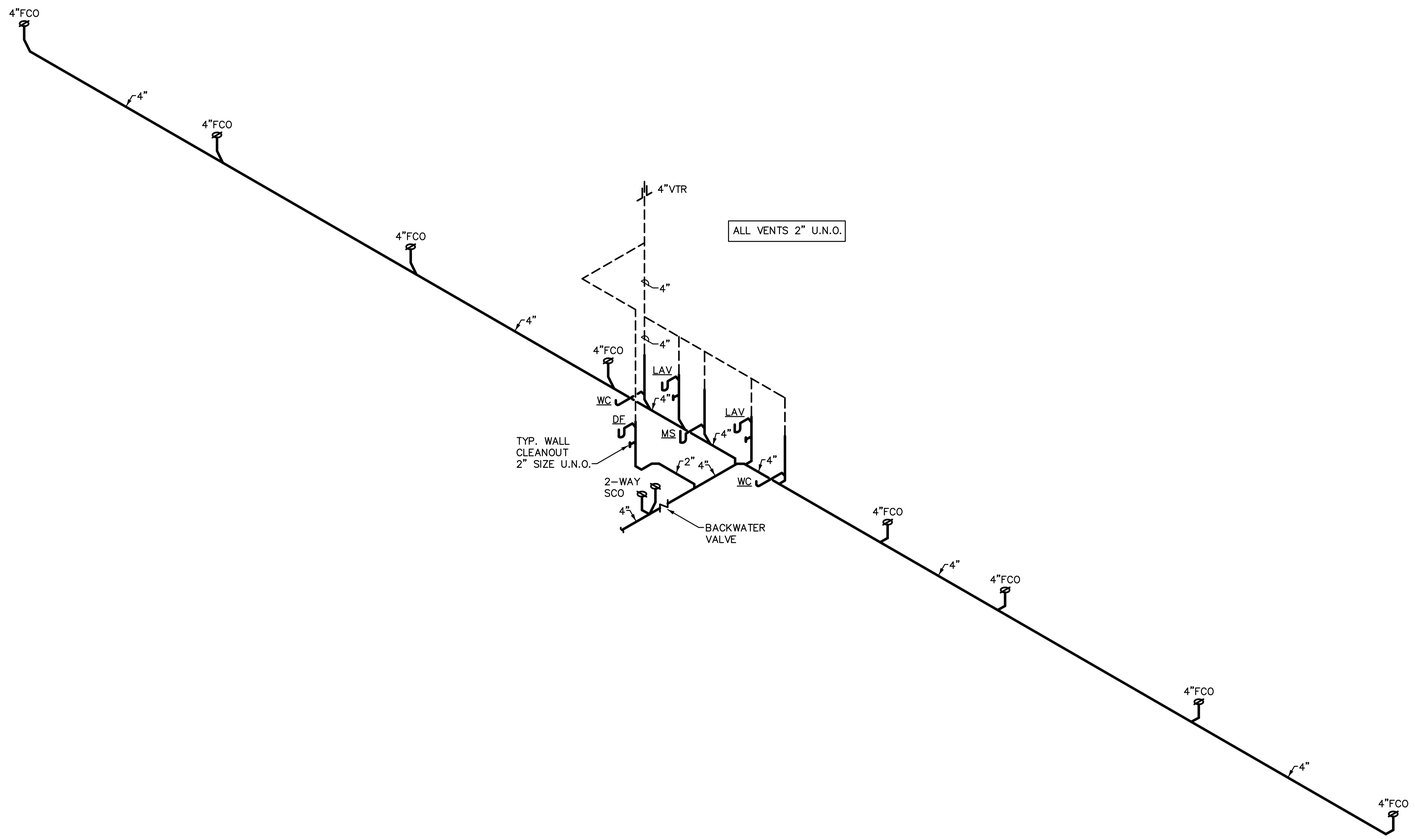

WASTE AND VENT SCHEMATIC

NTS

OSE Design Group, LLC
Consulting Engineers

511 West Delano Ave
Prescott, AZ 86301
(602) 499.0001

Project
#24027

10922 N. 153rd Ln.
Surprise, AZ 85379
(623) 444-6143

REVISIONS	BY

These drawings are the property of W. Alan Kenson & Associates P.C., and may not be reproduced in any way without the written consent of W. Alan Kenson & Associates, P.C.

Registered Professional Engineer (Civil)
CERTIFICATE NO.
33491
WILLIAM MARK ODELL
Date Signed 06/17/24
ARIZONA U.S.A.

W. Alan Kenson & Associates, P.C.
P 928-443-5812
F 928-443-5815
P.O. Box 11593
Prescott, AZ 86304
email: waka@cableone.net
www.kenson-associates.com
ARCHITECTURE & PLANNING

DRAWING: Plumbing Schematics

PROJECT: JSC Contracting Building B
6601 Inter Cal Way
Prescott, AZ 86301

APN: 103-50-054D

CNPLANS_B2407-176 6601 INTER CAL WAY PLANS

DRAWN BY	
CHECKED BY	
DATE	March 6th, 2024
JOB NO.	799
SHEET	P3.1

May 10, 2024 - 1:17pm

GAS PIPING NOTES:

1. MINIMUM DEPTH OF GAS PIPING TO BE 18" BELOW GRADE.
2. GAS PIPING SHALL NOT BE INSTALLED IN OR ON THE GROUND UNDER ANY BUILDING.
3. GAS PIPING SHALL NOT RUN IN HOLLOW CORE OF BLOCK.
4. PROVIDE SHUT-OFF COCK, UNION AND 6" LONG DIRT LEG WITH CAP AT EACH GAS LINE DROP TO APPLIANCE. DIRT LEG SHALL BE LOCATED DOWNSTREAM OF THE THE SHUT-OFF COCK.
5. ALL GAS USING EQUIPMENT TO BE NATURAL FUEL.
6. DO NOT USE FLEXIBLE PIPE CONNECTIONS TO EQUIPMENT.
7. ALL GAS PIPING UNDER ASPHALT OR CONCRETE PAVING ADJOINING BUILDING MUST BE SLEEVED IN GAS TIGHT PIPE (SCHEDULE 40 PVC PIPE), SLEEVE SIZE SHALL (MINIMUM) 2 PIPE SIZES LARGER THAN THE GAS PIPE.
8. ALL GAS PIPING, MATERIALS, VALVES, FITTINGS, INSTALLATION AND TESTING SHALL COMPLY WITH CHAP. 4, 2018 INTERNATIONAL FUEL GAS CODE.
9. VERIFY ALL GAS BTU/H INPUTS WITH ACTUAL BTU/H INPUT OF APPLIANCE SUPPLIED.
10. ALL GAS LINES INSTALLED THROUGH CMU WALLS, ETC., SHALL BE SLEEVED WITH STEEL PIPE A MINIMUM OF (2) (TWO) PIPE SIZES LARGER THAN THE GAS PIPE.
11. EXTERIOR GAS PIPING SHALL RECEIVE ONE COAT EACH OF A RUST AND WEATHER RESISTANT PRIMER AND TOP COAT. COORDINATE WITH ARCHITECT FOR COLOR.

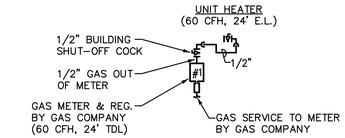

1 P3.2 **GAS PIPING DIAGRAM**
METER #1 NTS

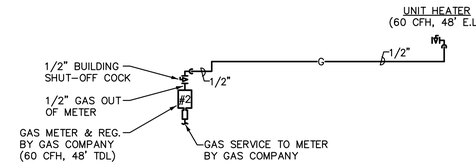

2 P3.2 **GAS PIPING DIAGRAM**
METER #2 NTS

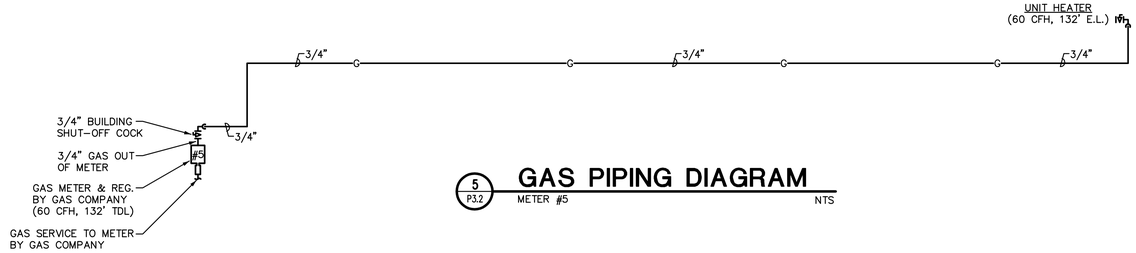

5 P3.2 **GAS PIPING DIAGRAM**
METER #5 NTS

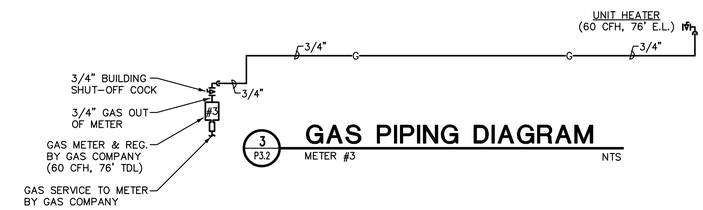

3 P3.2 **GAS PIPING DIAGRAM**
METER #3 NTS

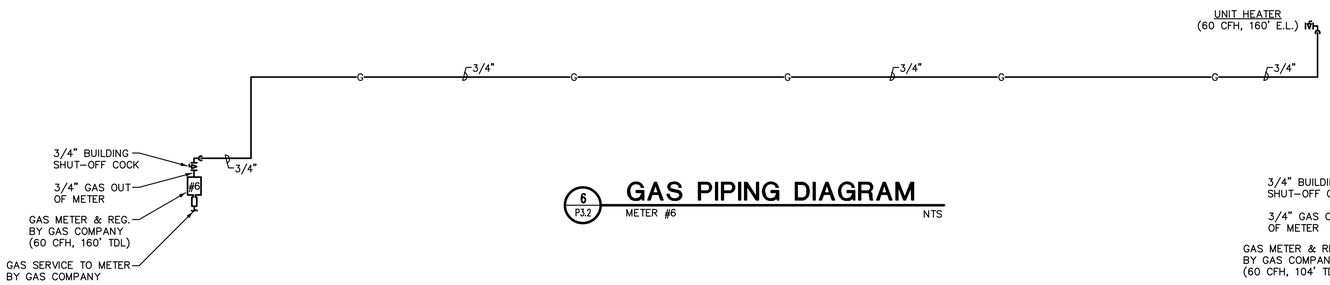

6 P3.2 **GAS PIPING DIAGRAM**
METER #6 NTS

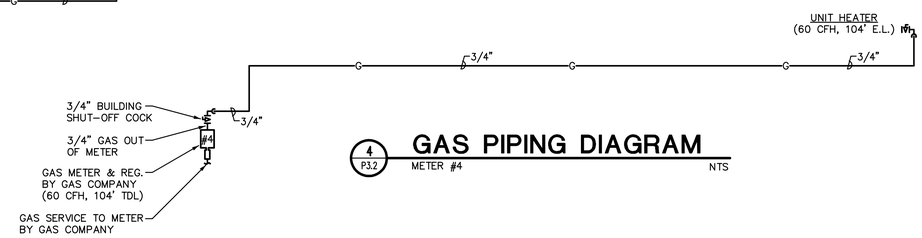

4 P3.2 **GAS PIPING DIAGRAM**
METER #4 NTS

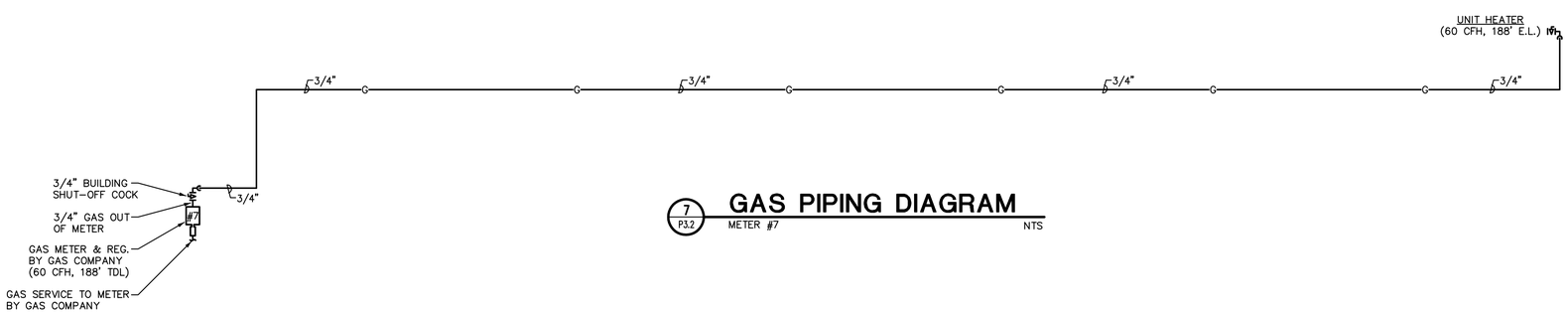

7 P3.2 **GAS PIPING DIAGRAM**
METER #7 NTS

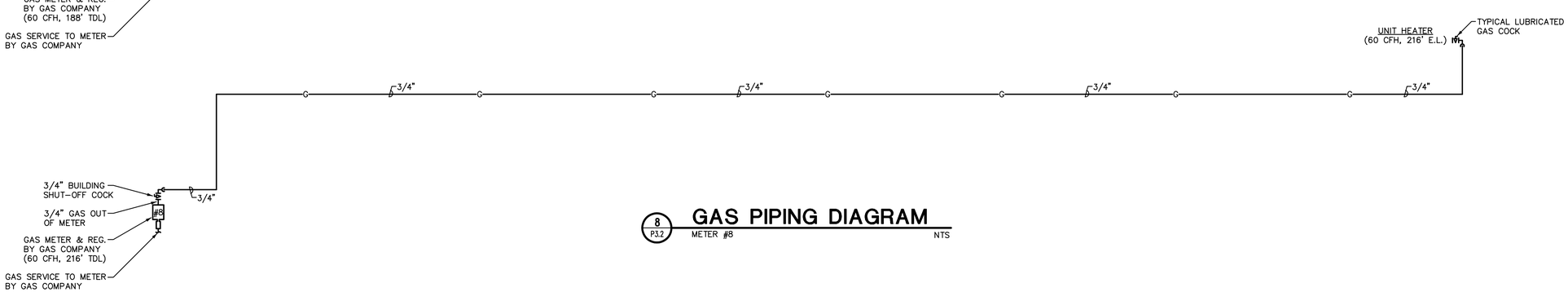

8 P3.2 **GAS PIPING DIAGRAM**
METER #8 NTS

May 10, 2024 - 1:17pm

OSE Design Group, LLC
Consulting Engineers
611 West Delano Ave
Prescott, AZ 86301
(602) 499.0001
Project #24027
10922 N. 153rd Ln.
Surprise, AZ 85379
(623) 444-6143

REVISIONS	BY

These drawings are the property of W. Alan Kenson & Associates P.C., and may not be reproduced in any way without the written consent of W. Alan Kenson & Associates, P.C.

Registered Professional Engineer (Civil)
33491
WILLIAM MARK ODELL
Date Signed 06.17.24
ARIZONA U.S.A.
(Designer)

W. Alan Kenson & Associates, P.C.
P 928-443-5812 P.O. Box 11593
F 928-443-5815 Prescott, AZ 86304
email: waka@cableone.net
www.kenson-associates.com
ARCHITECTURE & PLANNING

DRAWING: Plumbing Schematics

PROJECT: JSC Contracting Building B
6601 Inter Cal Way
Prescott, AZ 86301

APN: 103-50-054D

~~CNPLANS - B2407-176-6601 INTER-CAL WAY PLANS~~

DRAWN BY	
CHECKED BY	
DATE	March 6th, 2024
JOB NO.	799
SHEET	P3.2

ELECTRICAL SYMBOLS

NOTE: NOT ALL SYMBOLS ARE USED ON THIS PROJECT

- A/Q — FLUORESCENT FIXTURE, WITH FIXTURE DESIGNATED BY LETTER. SMALL LETTER INDICATES SWITCH LEG
- NL — NIGHT LIGHT– NOT SWITCHED
- FLUORESCENT STRIP FIXTURE.
- CEILING OR WALLMOUNTED FIXTURE.
- PC — PORCELAIN PULL CHAIN FIXTURE
- J — JUNCTION BOX
- J — JUNCTION BOX WITH FLEX CONNECTION.
- SINGLE FACE EXIT SIGN– NOT SWITCHED
- DOUBLE FACED EXIT SIGN– NOT SWITCHED.
- TWO HEAD EMERGENCY LIGHT WITH BATTERY.
- POLE–MOUNTED FIXTURE – No. OF LUMINAIRES AS SHOWN & SCHEDULED
- S — SINGLE POLE SWITCH, + 48" A.F.F. (20A–120/277V)
- S3 — THREE WAY SWITCH, + 48" A.F.F. (20A–120/277V)
- S4 — 4–WAY SWITCH +48" AFF (20A–120/277V)
- SP — SWITCH AND PILOT LIGHT (20A–120–/277V)
- SK — SINGLE POLE SWITCH, KEY OPERATED (20A)
- DIMMER CONTROL, + 48" A.F.F. EQUAL TO LUTRON "NOVA" SERIES, SIZED TO MATCH LOAD SERVED
- VS — VARIABLE SPEED FAN CONTROL, +48" A.F.F.
- DUPLEX RECEPTACLE, + 18" A.F.F. (20A)
- DUPLEX RECEPTACLE ABOVE COUNTER, VERIFY HEIGHT. (20A)
- FOURPLEX RECEPTACLE, + 18" A.F.F. (20A)
- SPECIAL RECEPTACLE – SIZE & TYPE AS NOTED
- POWER FLUSH FLOOR OUTLET
- TELEPHONE OUTLET PLASTER RING AT + 18" A.F.F. HUBBELL #P12 COVERPLATE. 3/4"C TO CEILING SPACE UNLESS SHOWN WITH HOMERUNS.
- DATA SYSTEM OUTLET, 4" SQUARE BOX AND COVERPLATE, 3/4" C. TO CEILING SPACE UNLESS SHOWN WITH HOMERUN, + 18" A.F.F.
- TELE/DATA COMBO OUTLET, 4" SQUARE BOX AND COVERPLATE, 3/4" C. TO CEILING SPACE UNLESS SHOWN WITH HOMERUN, + 18" A.F.F.
- CABLE TELEVISION (CATV) OUTLET PLASTER RING AT + 18" A.F.F. U.N.O. HUBBELL COVERPLATE. 3/4"c TO CEILING SPACE UNLESS SHOWN WITH HOMERUNS.
- TELPHONE SYSTEM CONDUIT HOMERUN WITH NYLON PULLWIRE (1"C MIN UNO)
- TV — CLOSED CIRCUIT TV (CCTV) OUTLET SAME AS CATV OUTLET
- DOOR CHIME
- REMOTE CONTROL STATION @ +48" AFF
- DISCONNECT SWITCH, FUSE PER EQUIPMENT MANUFACTURERS RECOMMENDATION. OUTSIDE NEMA 3R – N.F. = NON–FUSED.
- COMBINATION STARTER AND FUSIBLE DISCONNECT SWITCH SIZE AS NOTED
- E — EQUIPMENT TERMINATION CONNECTION POINT VERIFY EXACT LOCATION LOAD AND VOLTAGE AS NOTED
- MOTOR
- SM — THERMAL PROTECTED SWITCH
- MOTOR STARTER – SHADING INDICATES F.B.O.
- DISTRIBUTION PANELBOARD.
- BRANCH CIRCUIT PANELBOARD.
- CONDUIT BELOW FLOOR OR UNDERGROUND
- CONDUIT IN WALL OR ABOVE CEILING
- HOMERUN TO PANEL, NEUTRAL AND PHASE WIRING DESIGNATION (SEE GROUNDING NOTE)
- CONDUIT TURNING UP
- CONDUIT TURNING DOWN
- CONDUIT STUB–OUT, MARK AND CAP AS DIRECTED
- GROUND WIRE (SIZE AS NOTED) EXTENDED AND CONNECTED TO APP'D GROUND

ABBREVIATIONS

A.F.F.	ABOVE FINISHED FLOOR (℄ OF OUTLET)
A.F.G.	ABOVE FINISHED GRADE (℄ OF OUTLET)
E.C.	EMPTY CONDUIT
G.F.I.	GROUND FAULT INTERRUPTER
WP	WEATHERPROOF
UNO	UNLESS OTHERWISE NOTED
NL	NIGHT LIGHT
TYP	TYPICAL
EDF	ELECTRIC DRINKING FOUNTAIN
TMB	TELEPHONE MOUNTING BOARD

SPECIFICATIONS

1. PRIOR TO SUBMITTING BID, SUBCONTRACTORS SHALL EXAMINE ALL GENERAL CONSTRUCTION DRAWINGS AND VISIT THE CONSTRUCTION SITE TO BECOME FAMILIAR WITH EXISTING CONDITIONS UNDER WHICH HE WILL HAVE TO OPERATE AND WHICH IN ANY WAY AFFECTS THE WORK UNDER HIS CONTRACT. NO SUBSEQUENT ALLOWANCE WILL BE MADE IN BEHALF OF THE CONTRACTOR FOR ANY ERROR OR NEGLIGENCE ON HIS PART.
2. THE SUBCONTRACTOR SHALL BE HELD FULLY RESPONSIBLE FOR THE PROPER RESTORATION OF ALL EXISTING SURFACES REQUIRING PATCHING, PLASTERING, PAINTING AND /OR OTHER REPAIR DUE TO THE INSTALLATION OF ELECTRICAL WORK UNDER THE TERMS OF THE CONTRACT. CLOSE ALL OPENINGS, REPAIR ALL SURFACES, ETC., AS REQUIRED.
3. SEE ARCHITECTURAL DRAWINGS FOR ALL DIMENSIONS, ELEVATIONS AND BUILDING DETAILS. VERIFY LOCATION OF ALL OUTLETS, SWITCHES, AND WALL MOUNTED LIGHTING FIXTURES WITH ARCHITECTURAL DRAWINGS AND ACTUAL CONDITIONS. VERIFY ALL CEILING TYPES WITH ARCHITECTURAL DRAWINGS BEFORE ORDERING FIXTURES.
4. PRIOR TO ROUGH–IN AND FINAL CONNECTION, VERIFY ELECTRICAL CHARACTERISTICS AND EXACT LOCATION OF EQUIPMENT.
5. GROUT AND SEAL ALL CONDUIT PENETRATIONS OF WALLS AND FLOOR SLABS TO PRESERVE FIRE RATING AND WATERTIGHT INTEGRITY.
6. BRANCH CIRCUIT WIRING SHALL BE THHN/THWN INSULATION. PANEL FEEDERS SHALL BE TYPE XHHW. ALL WIRE SHALL BE COPPER. MINIMUM WIRE SIZE SHALL BE #12.
7. ALL WIRING TO BE INSTALLED IN RACEWAYS. TYPE OF RACEWAY SHALL BE AS REQUIRED BY CODE. MINIMUM CONDUIT SIZE SHALL BE 1/2".
8. PROVIDE CODE SIZED BOND WIRE IN ALL EMT, FLEXIBLE CONDUIT, OR NM CABLES.
9. ALL ELECTRICAL EQUIPMENT SHALL BE NEW , U.L. APPROVED AND COMMERCIAL GRADE.
10. WIRE RATED FOR 150° CENTIGRADE SHALL BE USED FOR ALL INCANDESCENT LIGHTING FIXTURES.
11. ALL ELECTRICAL WORK SHALL BE INSTALLED IN ACCORDANCE WITH THE LATEST NATIONAL CODE, (N.E.C.), AND ALL APPLICABLE FEDERAL, STATE AND LOCAL CODES.
12. PROVIDE TYPEWRITTEN DESCRIPTIVE PANEL DIRECTORIES

NOTE:

1.) ALL SUB–PANELS, SERVICE EQUIPMENT, AND EQUIPMENT DISCONNECTS SHALL BE PROVIDED WITH THE WORKING CLEARENCES REQUIRED BY THE LATEST ADOPTED NEC.

SITE RELATED WORK

PRIOR TO COMMENSING WORK AND/OR SUBMITTING BASE BID, THE CONTRACTOR SHALL VISIT THE SITE AND SATISFY HIMSELF TO EXISTING WORK RELATED CONDITIONS WITH REGARDS TO THE FOLLOWING:

1. TRENCH AND BACKFILL FOR CONDUITS PER UTILITY CO. REQUIREMENTS. (FIELD VERIFY)
2. TRANSFORMER MOUNTING PAD PER UTILITY CO. REQUIREMENTS.
3. PROVIDE SECONDARY AND/OR PRIMARY CONDUITS. (SEE ONE LINE DIAGRAM).
4. SERVICE ENTRANCE SECTION (S.E.S.). VERIFY PROPOSED EQUIPMENT WILL FIT THE SPACE ALLOTED PRIOR TO ORDERING AND/OR CONSTRUCTION.
5. P.V.C. TELEPHONE CONDUIT WITH PULL WIRE AND RIGID FACTORY STEEL BENDS PER TELEPHONE CO. REQUIREMENTS. (SIZE AS NOTED OR REQUIRED BY UTILITY VERIFY PRIOR TO INSTALLATION).
6. THE ELECTRICAL CONTRACTOR IS RESPONSIBLE FOR COORDINATION AND COMPLIANCE WITH ALL UTILITY COMPANIES REQUIREMENTS, INCLUDING, BUT NOT LIMITED TO ANY AND ALL ADDITIONAL COSTS FOR MATERIAL AND LABOR FOR WORK WHETHER SHOWN ON THE PLANS OR NOT. ACTUAL ROUTING, CONDUIT, TRENCH AND PAD REQUIREMENTS SHALL BE AS SPECIFIED BY UTILITY COMPANIES. VERIFY REQUIREMENTS WITH UTILITIES PRIOR TO INSTALLATION.
7. WHERE APPLICABLE, PROVIDE EQUIPMENT GROUNDING (BOND) CONDUCTOR FOR METALLIC PROCESSING AND FIRE SPRINKLER PIPING PER NEC 250–80 AND SIZED PER NEC 250–95 TABLE.

OUTLETS INSTALLED IN FIREWALLS

OUTLETS, (SWITCHES, RECEPTACLES, ETC), MOUNTED IN FIRE RATED WALLS SHALL NOT OCCUPY THE SAME WALL CAVITY WITH OTHER OUTLETS WHETHER ON SAME SIDE OR BACK–TO–BACK. RECOMMENDED SPACING IS 24 INCHES HORIZONTAL OMIO.

OUTLET MOUNTING HEIGHTS PER AMERICAN DISABILITY ACT

ELECTRICAL CONTRACTOR SHALL COMPLY WITH THE 2010 ADA SAD REQUIREMENTS FOR ALL SWITCHES. RECEPTACLES, TELE./DATA AND SIDE REACH CONTROL SWITCHES. ALL WALL CONTROLS, SWITCHES AND THERMOSTATS TO BE MOUNTED WITH TOP OF J–BOX AT 48" A.F.F. ALL ABOVE COUNTER CONTROLS, SWITCHES & OUTLETS TO BE MOUNTED WITH HORIZONTAL ORIENTATION WITH TOP OF J–BOX AT 44" A.F.F.. ALL WALL OUTLETS TO BE MOUNTED AT 15" A.F.F. TO BOTTOM OF J–BOX.

SPECIAL REQUIREMENTS PER:
THE FAIR HOUSING ACT.

ALL RECEPTACLES AT RESTROOM LAVATORIES TO BE GFCI TYPE. ALL WALL CONTROLS, SWITCHES AND THERMOSTATS TO BE MOUNTED WITH TOP OF J–BOX AT 48" A.F.F. ALL ABOVE COUNTER CONTROLS, SWITCHES & OUTLETS TO BE MOUNTED WITH HORIZONTAL ORIENTATION WITH TOP OF J–BOX AT 44" A.F.F. ALL WALL OUTLETS TO BE MOUNTED AT 15" A.F.F. TO BOTTOM OF J–BOX.

FIRE WALL/FLOOR PENETRATION

ALL PENETRATIONS OF FIRE RESISTIVE FLOORS OR SHAFT WALLS SHALL BE PROTECTED BY MATERIALS AND INSTALL–ATION DETAIL THAT CONFORM TO UNDERWRITERS LABOR–ATORY'S LISTINGS FOR THROUGH PENETRATION FIRESTOP SYSTEMS. THE CONTRACTOR SHALL SUBMIT SHOP DRAWING DETAILS WHICH SHOW COMPLETE CONFORMANCE WITH THE LISTING TO THE ARCHITECT AND SUCH DRAWINGS SHALL BE AVAILABLE TO THE LOCAL GOVERNING INSPECTORS. THE DRAWINGS SHALL BE SPECIFIC FOR EACH PENETRATION WITH ALL VARIABLES DEFINED.

FIRE ALARM SYSTEM SPECIFICATION

A COMPLETE OPERATIONAL MANUAL/AUTOMATIC FIRE ALARM SYSTEM TO BE MONITORED AS DIRECTED BY OWNER SHALL BE FURNISHED AND INSTALLED, AS REQUIRED FOR THIS TYPE OF BUILDING IN ACCORDANCE WITH STATE AND/OR LOCAL CODE AND AS APPROVED BY THE CODE ENFORCING AUTHORITY HAVING JURISDICTION.
THE FIRE ALARM CONTROL PANEL SHALL BE LOCATED AS DIRECTED BY THE ENFORCING AUTHORITY. (CONNECT TO CIRCUIT LA–15).
FIRE ALARM CONTRACTOR SHALL PROVIDE SPEC'S., DRAWINGS OF DEVICE LOCATIONS AND CUT SHEETS OF DEVICES TO FIRE MARSHALL FOR APPROVAL PRIOR TO INSTALLATION.

FAULT POINT PANEL 'LA'

$$f = \frac{1.732 \times 15' \times 56{,}194\ A}{12{,}843 \times 208V} = .254$$

$$M = \frac{1}{1 + .254} = .797$$

$$I_{sc} = 56{,}194A \times .797 = 44{,}786\ AMPS$$

ONE LINE GENERAL NOTES:

1. SYSTEM SHOWN IS A TWO TIER SERIES RATED SYSTEM 65/10K. MANUFACTURER SHALL PROVIDE A UL LISTED SYSTEM TO MATCH THIS RATING.
2. MOTOR SHORT CIRCUIT CONTRIBUTION IS LESS THAN 1% OF SYSTEM SHORT CIRCUIT AMPS.
3. NO DESIGN CHANGES MAY BE MADE TO THE SYSTEM WITHOUT THE PRIOR APPROVAL OF THE DESIGN ELECTRICAL ENGINEER AND THE ELECTRICAL INSPECTOR

ONE LINE KEYNOTES:

1. PROVIDE A PERMANENT LABEL READING "THIS CIRCUIT FUSE IS PART OF A SERIES RATED SYSTEM WITH DOWNSTREAM PANELS 65/10K. 65,000 AMPS AVAILABLE. IDENTIFIED REPLACEMENT COMPONENT REQUIRED"
2. PROVIDE A PERMANENT LABEL READING "CAUTION– SERIES RATED SYSTEM 65/10K, AMPS AVAILABLE, IDENTIFIED REPLACEMENT COMPONENTS REQUIRED"

ELEC. LOAD CALCULATIONS

	ØA	ØB	ØC
PANEL 'HP' (HOUSE PANEL)	32.5 A	26.6 A	57.5 A
PANEL 'BA' (ESTIMATED)	125.0 A	125.0 A	125.0 A
PANEL 'BB'	125.0 A	125.0 A	125.0 A
PANEL 'BC'	125.0 A	125.0 A	125.0 A
PANEL 'BD'	125.0 A	125.0 A	125.0 A
PANEL 'BE'	125.0 A	125.0 A	125.0 A
PANEL 'BF'	125.0 A	125.0 A	125.0 A
PANEL 'BG'	125.0 A	125.0 A	125.0 A
PANEL 'BH'	125.0 A	125.0 A	125.0 A
TOTAL CODE LOAD =	1032.5 A	1026.6 A	1057.5 A

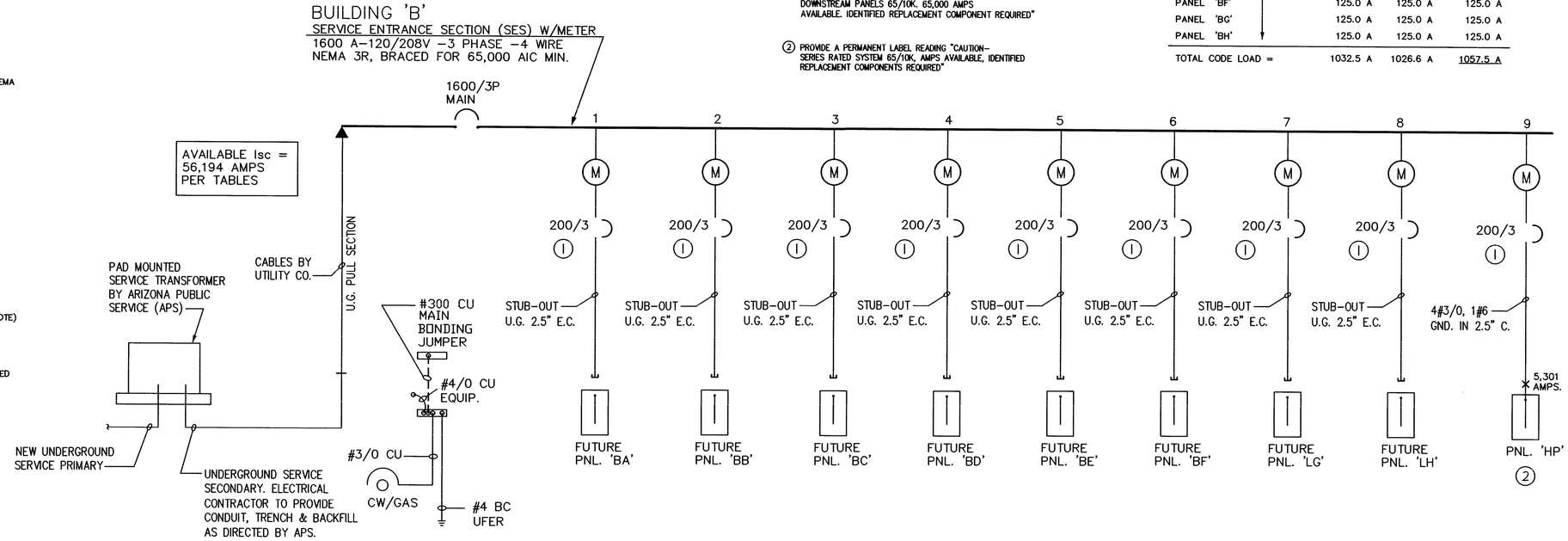

BLDG. 'B' ELECTRICAL ONE - LINE DIAGRAM

N.T.S.

ELECTRICAL DESIGN & CADD SERVICES INC.
1600 LAMB LANE
PRESCOTT, AZ. 86305
PH. (928) 776–4900
FAX (928) 776–7806
E–MAIL: EES@CABLEONE.NET
JOB# 24–16

REVISIONS	BY

These drawings are the property of W. Alan Kenson & Associates P.C., and may not be reproduced in any way without the written consent of W. Alan Kenson & Associates, P.C.

REGISTERED PROFESSIONAL ENGINEER (ELECTRICAL) CERTIFICATE NO. 7450 ANGELO OSSANNA Date Signed 6/15/24 ARIZONA, U.S.A.
EXPIRES 12/30/2024

W. Alan Kenson & Associates, P.C.
P 928-443-5812 P.O. Box 11593
F 928-443-5815 Prescott, AZ 86304
email: waka@cableone.net
www.kenson-associates.com
ARCHITECTURE & PLANNING
REGISTERED ARCHITECT ARIZONA

DRAWING: Electrical Symbols, Specifications, One-Line Diagram & Notes

PROJECT: JSC Contracting Building B, 6601 Inter Cal Way, Prescott, AZ 86301

APN: 103-50-054D

DRAWN BY: R.A.
CHECKED BY: A.O.
DATE: March 6th, 2024
JOB NO. 799
SHEET: E1.0

CNPLANS_B2407-176 6601 INTER CAL WAY PLANS

Jun 14, 2024 - 3:36pm

ELECTRICAL DESIGN & CADD SERVICES INC.
1600 LAMB LANE
PRESCOTT, AZ. 86305
PH. (928) 776-4900
CELL (928) 420-1200
E-MAIL: archie@elecdesign.net

JOB# 24-16

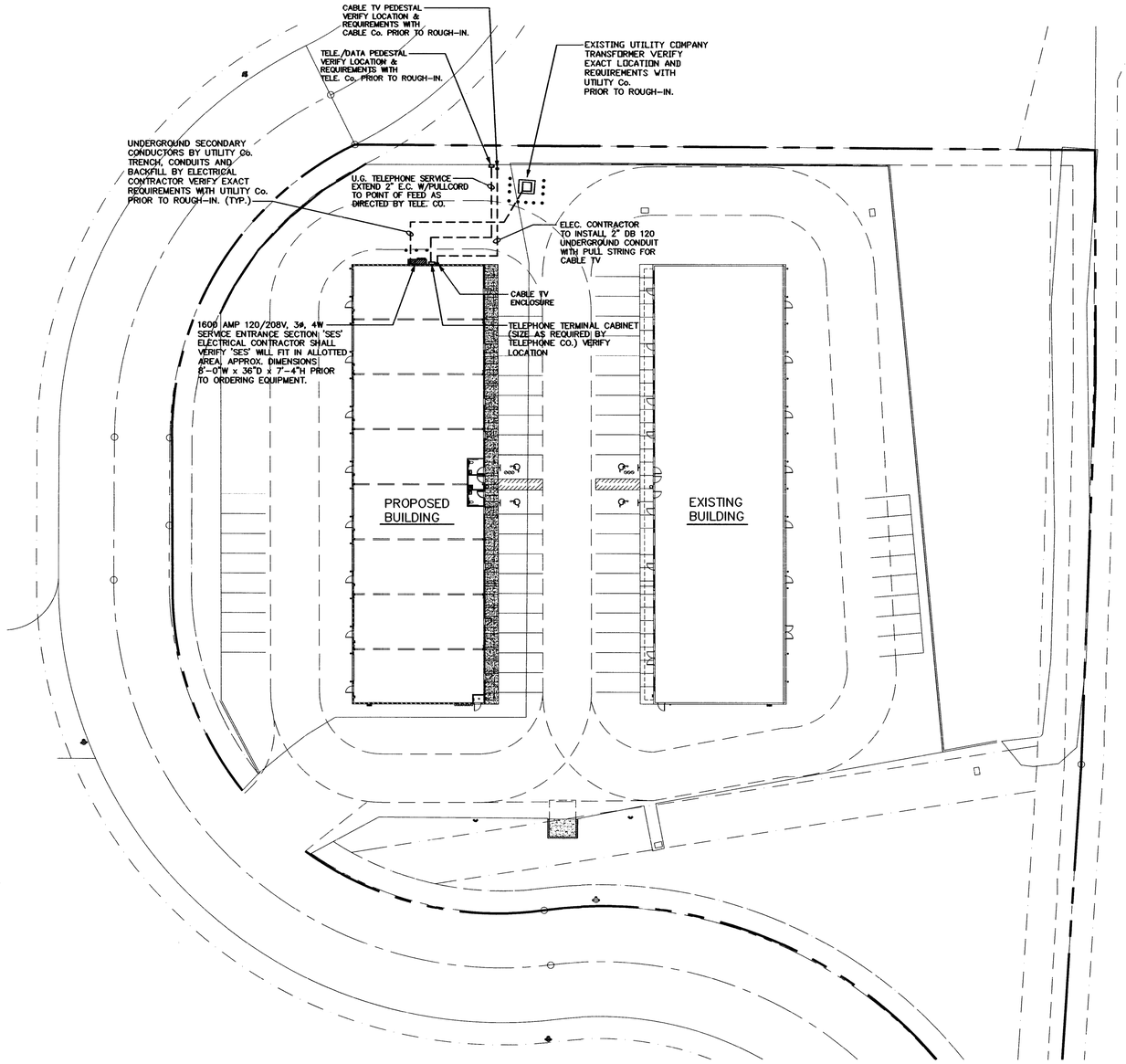

NOTE:
TIME CLOCK SHALL BE SEVEN DAY, PROGRAMMABLE, 8-CIRCUIT MIN. W/BATTERY BACK-UP, SET EACH INDIVIDUAL CIRCUIT AS DIRECTED BY ARCHITECT/OWNER.

Electrical Site Plan

Scale: 1"=30'-0"

Plan North

REVISIONS	BY

These drawings are the property of W. Alan Kenson & Associates P.C., and may not be reproduced in any way without the written consent of W. Alan Kenson & Associates, P.C.

Registered Professional Engineer (Electrical) CERTIFICATE NO. 7450 ANGELO OSSANNA Date Signed 6/13/24 ARIZONA, U.S.A.

EXPIRES 12/30/2024

W. Alan Kenson & Associates, P.C.
P 928-443-5812
F 928-443-5815
P.O. Box 11593
Prescott, AZ 86304
email: waka@cableone.net
www.kenson-associates.com
ARCHITECTURE & PLANNING

DRAWING: Electrical Site Plan

PROJECT: JSC Contracting Building B
6601 Inter Cal Way
Prescott, AZ 86301

APN: 103-50-054D

CNPLANS_B2407-176 6601 INTER CAL WAY PLANS

DRAWN BY	R.A.
CHECKED BY	A.O.
DATE	March 6th, 2024
JOB NO.	799
SHEET	E1.1

Jun 14, 2024 - 3:22pm

ELECTRICAL DESIGN & CADD SERVICES INC.
1600 LAMB LANE
PRESCOTT, AZ. 86305
PH: (928) 776-4900
CELL (928) 420-1200
E-MAIL: archie@elecdesign.net

JOB# 24-16

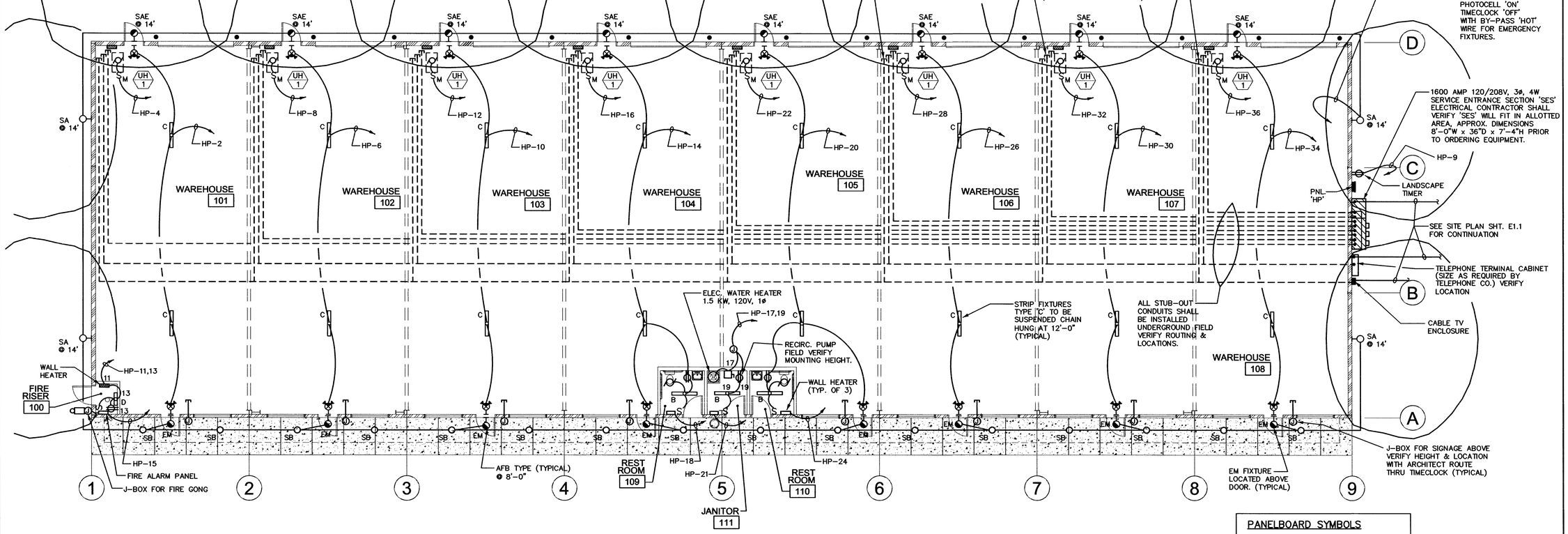

Lighting & Power Floor Plan

Scale: 1/8"=1'-0"

Plan North

GENERAL POWER NOTES:

1. ELECTRICAL CONTRACTOR SHALL VERIFY MOUNTING HEIGHT OR LOCATION OF ANY ELECTRICAL EQUIPMENT AND OR DEVICES HE IS TO VERIFY ITEMS WITH ELECTRICAL ENGINEER, ARCHITECT OR OWNER PRIOR TO ROUGH-IN.
2. ALL RECEPTACLES AT RESTROOM LAVATORIES TO BE GFCI TYPE INSTALLED AT +42" A.F.F.
3. ALL RECEPTACLES IN AREAS WITHIN 6'-0" OF A SINK SHALL BE GFCI TYPE PER NEC
4. EXTERIOR & ROOF MOUNTED MAINT. RECEPT'S. SHALL BE WP, GFCI TYPE PER NEC
5. VERIFY THE EXACT LOCATIONS OF ALL TELEPHONE OUTLETS, DATA OUTLETS AND SPECIAL SYSTEMS OUTLETS WITH THE ARCHITECT/OWNER PRIOR TO ROUGH-IN.
6. ELECTRICAL CONTRACTOR SHALL VERIFY MECHANICAL EQUIPMENT REQUIREMENTS BREAKER, DISC. & WIRE SIZE WITH MANUFACTURER PRIOR TO ROUGH-IN.
8. ELECTRICAL CONTRACTOR IS APPROVED TO USE SURFACE MOUNTED RECEPTACLES & CONDUIT IN WAREHOUSE VERIFY PRIOR TO ROUGH-IN.
9. ALL RECEPTACLES IN THE WAREHOUSE TO BE INSTALLED AT +48" A.F.F. GFCI TYPE.

GENERAL LIGHTING NOTES:

1. IF ELECTRICAL CONTRACTOR IS NOT CERTAIN OF MOUNTING HIEGHT OR LOCATION OF ANY LIGHTING FIXTURES OR SWITCHES HE IS TO VERIFY ITEMS WITH ELCTRICAL ENG., ARCHITECT OR OWNER PRIOR TO ROUGH-IN.
2. NIGHT LIGHTS (NL), EMERGENCY & EXIT LIGHT FIXTURES SHALL BE CONNECTED TO UNSWITCHED LEG OF CIRCUIT.

EXIT / EMERGENCY SCHEDULE

Symbol	Manufacturer	Catalog Number	Description	Lamp	Wattage
	Lithonia Lighting	LHQM LED R HO	QUANTUM LED EMERGENCY COMBO	LED	3
	Lithonia Lighting	ELMLT W LP06VS LTP	QUANTUM LED EMERGENCY TWIN-HEAD UNIT WALL MOUNT	LED	10.8

Schedule

Symbol	Label	Quantity	Manufacturer	Catalog Number	Description	Lamp	Lumens Per Lamp	Light Loss Factor	Wattage
	A		NOT USED						
	B		Lithonia Lighting	CLX L48 3000LM SEF FDL MVOLT GZ10 35K 80CRI WH	CLX LED Linear 48" 3,000 lumens, Standard Efficiency, Less louver, Flat diffuse lens, General distribution, MVOLT, 0-10V dimming, 3500 CCT, 80 CRI	LED - 3500K COLOR TEMP	2738	0.91	20.32
	C		Lithonia Lighting	CLX L48 7000LM SEF FDL MVOLT GZ10 35K 80CRI WH	CLX LED Linear 48" 7,000 lumens, Standard Efficiency, Less louver, Flat diffuse lens, General distribution, MVOLT, 0-10V dimming, 3500 CCT, 80 CRI	LED - 3500K COLOR TEMP	6628	0.91	49.05
	D		Lithonia Lighting	CLX L24 3000LM SEF FDL MVOLT GZ10 35K 80CRI WH	CLX LED Linear 24" 1,500 lumens, Standard Efficiency, Less louver, Flat diffuse lens, General distribution, MVOLT, 0-10V dimming, 3500 CCT, 80 CRI	LED - 3500K COLOR TEMP	1500	0.91	10.32
	EM		Lithonia Lighting Affinity	AFB PEL DDBTDX UVOLT N WT CW	AFB premium FCT (Forward Throw)	LED, Forward throw	451	0	5.48
	SA		Lithonia Lighting	WDGE1 LED P1 30K 80CRI VW MVOLT SRM (FINISH)	WDGE1 LED WITH P1 - PERFORMANCE PACKAGE, 3000K, 80CRI, VISUAL COMFORT WIDE OPTIC	LED - 3000K	1163	0.91	10.0002
	SAE		Lithonia Lighting	WDGE1 LED P1 30K 80CRI VW MVOLT SRM E4WH (FINISH)	WDGE1 LED WITH P1 - PERFORMANCE PACKAGE, 3000K, 80CRI, VISUAL COMFORT WIDE OPTIC	LED - 3000K	1163	0.91	10.0002
	SB		Lithonia Lighting	LDN6 30/07 LO6AR LSS MVOLT GZ10	6IN LDN, 3000K, 750LM, CLEAR, SEMI-SPECULAR REFLECTOR, CRI80	LED - 3000K	748	0.91	8.91

PANELBOARD SYMBOLS

- ✱ CONTINUOUS DUTY/LARGEST MOTOR @ 125%
- ● PROVIDE BREAKER W/ HANDLE "LOCK-ON" DEVICE
- ◆ CIRCUIT VIA TIMECLOCK
- ▲ CIRCUIT VIA PHOTOCELL

PANELBOARD HP SCHEDULE

MAINS: 200A MLO
VOLTAGE: 120/208, 3, 4W
TYPE: GE, SQ D OR EQUAL
LOCATION: SEE PLAN
MOUNTING: SURFACE
MIN. A.I.C.: 65/10K SERIES RATED

	CIRCUIT DESCRIPTION	BKR.	CIR. NO.	LOAD-VA ØA	LOAD-VA ØB	LOAD-VA ØC	CIR. NO.	BKR.	CIRCUIT DESCRIPTION
◆▲✱	LIGHTS - EXTERIOR BLDG.	20/1	1	1500			2	20/1	LIGHTS - WAREHOUSE 101
				250					
	SPARE		3		200		4		UNIT HEATER - WAREHOUSE 101
	SPARE		5			250	6		LIGHTS - WAREHOUSE 102
	SPARE		7				8		UNIT HEATER - WAREHOUSE 102
	LANDSCAPE TIMER		9	200	200		10		LIGHTS - WAREHOUSE 103
					250				
	WALL HEATER - FIRE RISER ROOM		11			1500	12		UNIT HEATER - WAREHOUSE 103
						200			
	LIGHTS & RECEPT. - FIRE RISER ROOM		13	450			14		LIGHTS & RECEPT. - WAREHOUSE 104
				450					
●	FIRE ALARM PANEL		15		200		16		UNIT HEATER - WAREHOUSE 104
					200				
	ELEC. WATER HEATER		17			1500	18		WALL HEATER - RESTROOM 109
						1500			
	LIGHTS & RECEPT. - JANITOR ROOM		19	450			20		LIGHTS & RECEPT. - WAREHOUSE 105
				450					
	WALL HEATER - JANITOR ROOM		21		1500		22		UNIT HEATER - WAREHOUSE 105
					200				
	SPACE		23			1500	24		WALL HEATER - RESTROOM 110
			25				26		LIGHTS - WAREHOUSE 106
				250					
			27				28		UNIT HEATER - WAREHOUSE 106
					200				
			29				30		LIGHTS - WAREHOUSE 107
						250			
			31				32		UNIT HEATER - WAREHOUSE 107
				200					
			33				34		LIGHTS - WAREHOUSE 108
					250				
			35				36		UNIT HEATER - WAREHOUSE 108
						200			
			37				38		SPARE
			39				40		SPARE
			41				42		SPARE
	TOTAL LOAD PER PHASE:			3900	3200	6900	HI# 6900 / 120 = 57.5 AMPS		

REVISIONS	BY

These drawings are the property of W. Alan Kenson & Associates P.C., and may not be reproduced in any way without the written consent of W. Alan Kenson & Associates, P.C.

CERTIFICATE NO. 7450 ANGELO OSSANNA
EXPIRES 12/30/2024

W. Alan Kenson & Associates, P.C.
P 928-443-5812
F 928-443-5815
P.O. Box 11593
Prescott, AZ 86304
email: waka@cableone.net
www.kenson-associates.com
ARCHITECTURE & PLANNING

DRAWING: Lighting & Power Floor Plan

PROJECT: JSC Contracting Building B
6601 Inter Cal Way
Prescott, AZ 86301

APN: 103-50-054D

CNPLANS_B2407-176 6601 INTER CAL WAY PLANS

DRAWN BY R.A.
CHECKED BY A.O.
DATE March 6th, 2024
JOB NO. 799
SHEET

E1.2

Jun 14, 2024 - 3:39pm